2019 TERYX4™ LE CAMO

PARTS DIAGRAM

Fuel Tank(GKF/GKFA)

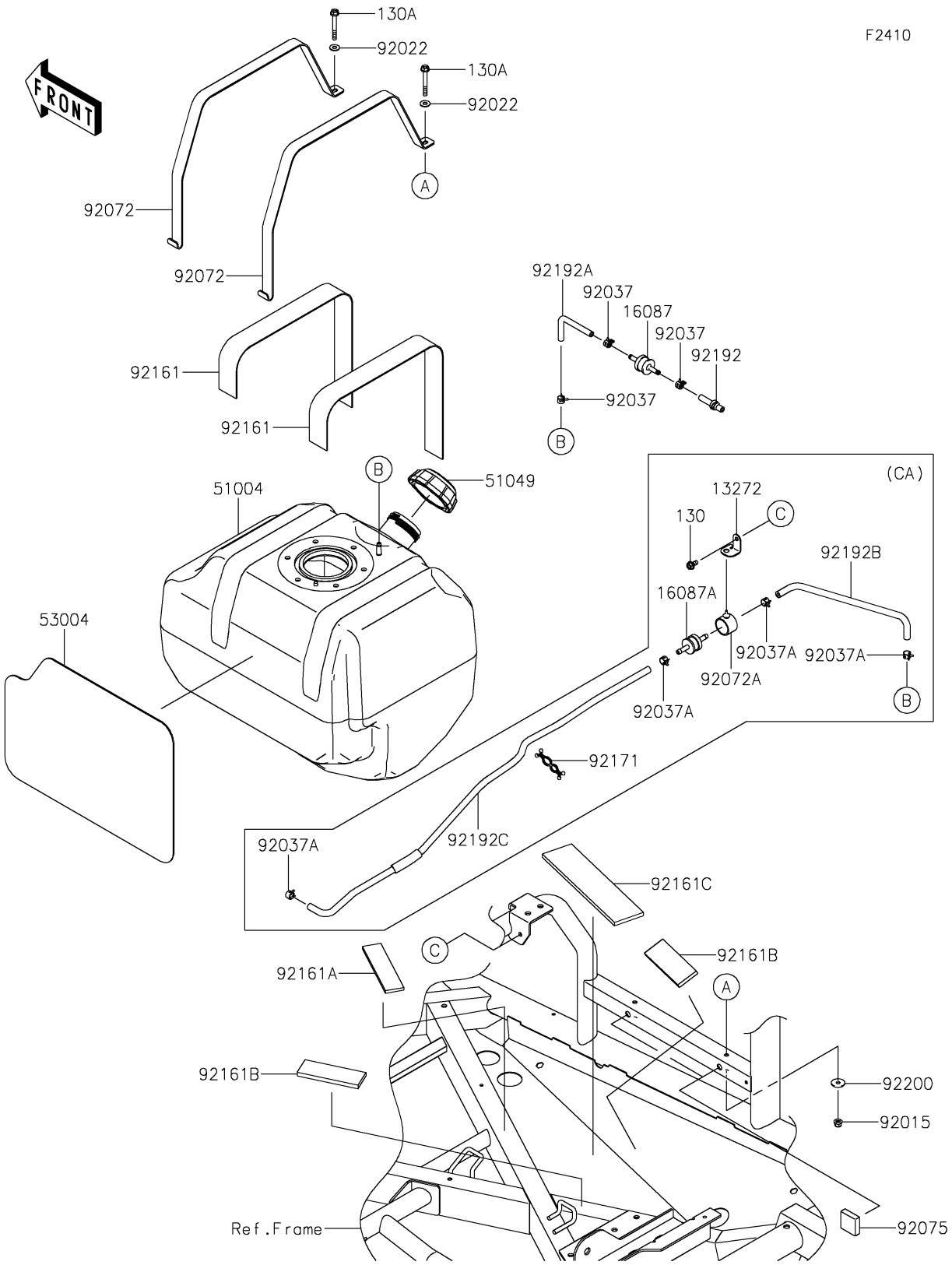

© 2026 Kawasaki Motors Corp., U.S.A.

2019 TERYX4™ LE CAMO

PARTS LIST

Fuel Tank(GKF/GKFA)

ITEM NAME	PART NUMBER	QUANTITY

© 2026 Kawasaki Motors Corp., U.S.A.