2019 TERYX® LE

PARTS DIAGRAM

Rear Hubs/Brakes

F2240



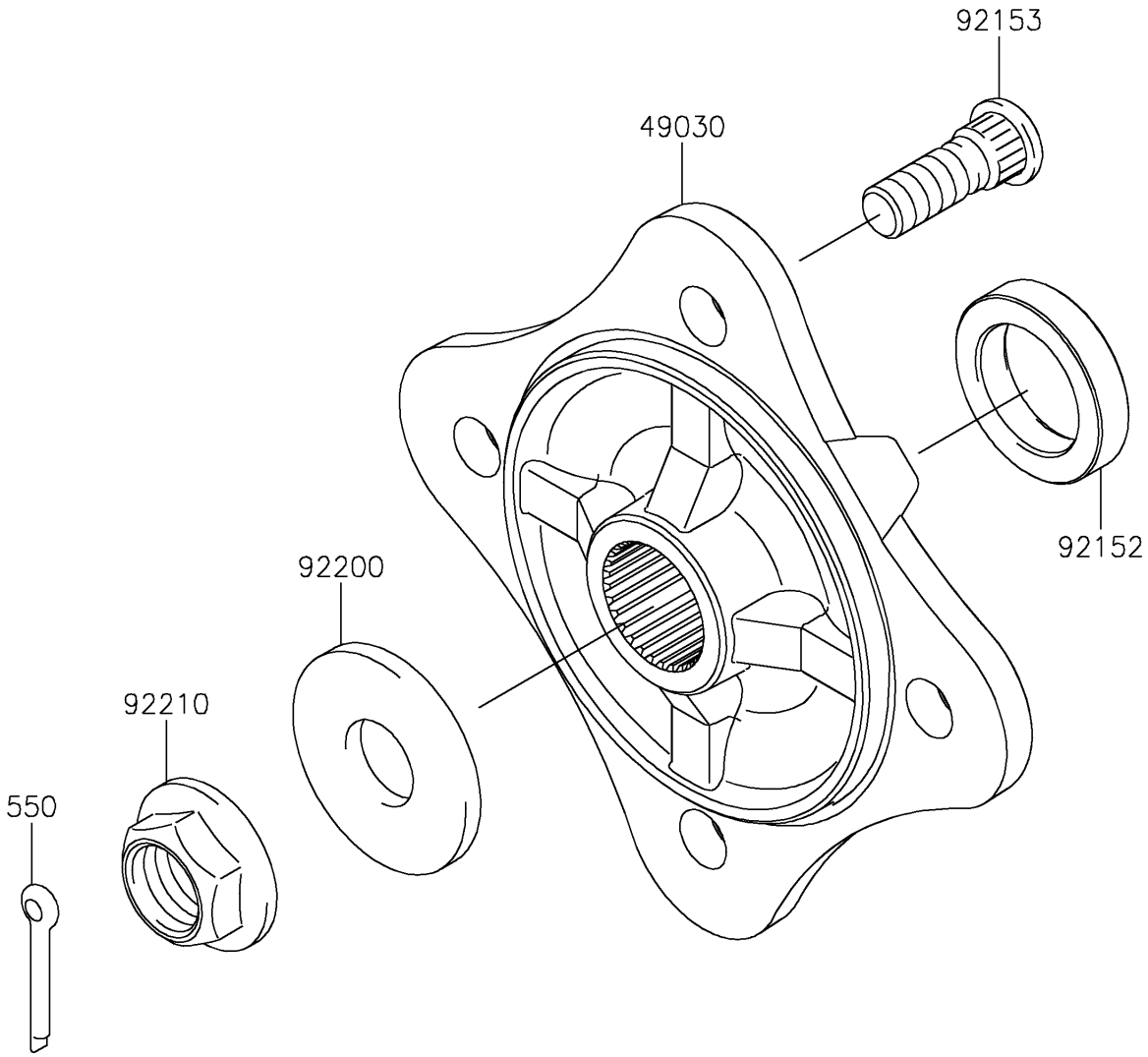

© 2026 Kawasaki Motors Corp., U.S.A.

2019 TERYX® LE

PARTS LIST

Rear Hubs/Brakes

ITEM NAME	PART NUMBER	QUANTITY
HUB,RR (Ref # 49030)	49030-0563	2
COLLAR,30.1X44X9 (Ref # 92152)	92152-1700	2
BOLT,12MM (Ref # 92153)	92153-1915	8
WASHER,20.3X52.0X4.5 (Ref # 92200)	92200-1739	2
NUT,FLANGED,20MM (Ref # 92210)	92210-2093	2
PIN-COTTER,4.0X30 (Ref # 550)	550AA4030	2

© 2026 Kawasaki Motors Corp., U.S.A.