2025 RIDGE® XR CREW LIMITED HVAC

Kawasaki
Let the Good Times Roll®

PARTS DIAGRAM

Carrier(s)

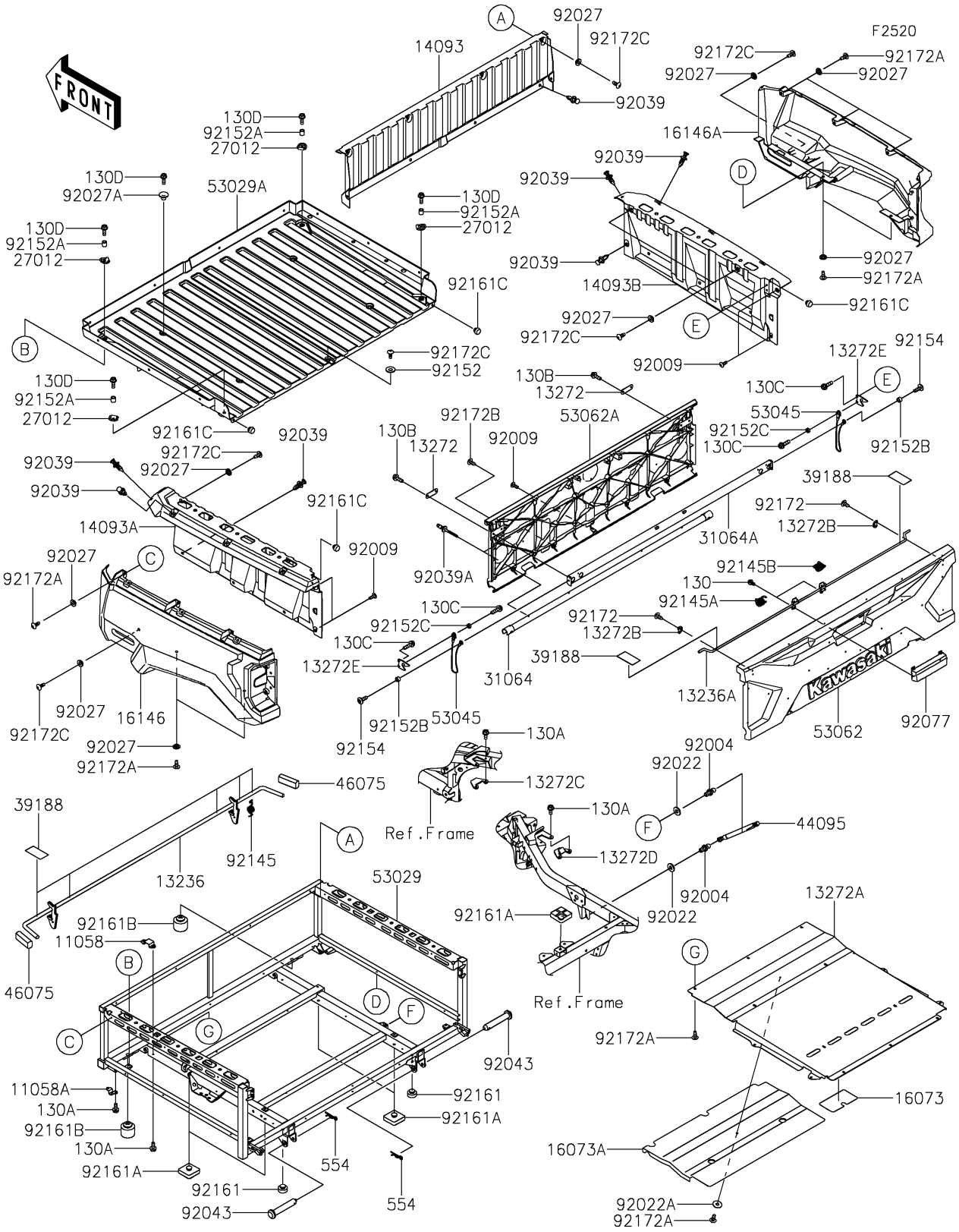

© 2026 Kawasaki Motors Corp., U.S.A.

2025 RIDGE® XR CREW LIMITED HVAC

Kawasaki
Let the Good Times Roll®

PARTS LIST

Carrier(s)

ITEM NAME	PART NUMBER	QUANTITY
BRACKET,CARRIER LATCH (Ref # 11058)	11058-0092	2
BRACKET (Ref # 11058A)	11058-0675	2
LEVER-COMP,CARRIER LATCH (Ref # 13236)	13236-0874	1
LEVER-COMP (Ref # 13236A)	13236-0891	1
PLATE (Ref # 13272)	13272-4064	2
PLATE,HEAT INSULATOR (Ref # 13272A)	13272-4065	1
PLATE (Ref # 13272B)	13272-4178	2
PLATE,CARRIER LATCH,LH (Ref # 13272C)	13272-4185	1
PLATE,CARRIER LATCH,RH (Ref # 13272D)	13272-7017	1
PLATE,TAIL GATE LATCH (Ref # 13272E)	13272-7074	2
COVER,FRONT CARRIER (Ref # 14093)	14093-1311	1
COVER,SIDE CARRIER,INNER,LH (Ref # 14093A)	14093-1314	1
COVER,SIDE CARRIER,INNER,RH (Ref # 14093B)	14093-1315	1
INSULATOR,HEAT,RR (Ref # 16073)	16073-0962	1
INSULATOR,HEAT,FR (Ref # 16073A)	16073-0978	1
COVER-ASSY,SIDE CARRIER,OUT,LH (Ref # 16146)	16146-0922	1
COVER-ASSY,SIDE CARRIER,OUT,RH (Ref # 16146A)	16146-0923	1
HOOK,CARRIER BOTTOM (Ref # 27012)	27012-0900	4
PIPE-COMP,TAIL GATE,LWR (Ref # 31064)	31064-0745	1
PIPE-COMP,TAIL GATE,UPP (Ref # 31064A)	31064-0843	1
TAPE,25X47X0.18 (Ref # 39188)	39188-0612	7
DAMPER-GAS FILLED (Ref # 44095)	44095-0002	1
GRIP,CARRIER LATCH (Ref # 46075)	46075-0672	2
CARRIER,BASE (Ref # 53029)	53029-0373	1
CARRIER,BOTTOM (Ref # 53029A)	53029-0374	1
HOOK-ASSY,TAIL GATE (Ref # 53045)	53045-0040	2
GATE-TAIL (Ref # 53062)	53062-0030	1
GATE-TAIL,INNER (Ref # 53062A)	53062-0031	1
STUD (Ref # 92004)	92004-0733	2

© 2026 Kawasaki Motors Corp., U.S.A.

2025 RIDGE® XR CREW LIMITED HVAC

Kawasaki
Let the Good Times Roll®

PARTS LIST

Carrier(s)

ITEM NAME	PART NUMBER	QUANTITY
SCREW,TAPPING,5X14 (Ref # 92009)	92009-1197	5
WASHER,8.2X19X2 (Ref # 92022)	92022-1533	2
WASHER,PLAIN,6.5X20X1 (Ref # 92022A)	92022-165	1
COLLAR,L=4.6 (Ref # 92027)	92027-1168	20
COLLAR (Ref # 92027A)	92027-1767	4
RIVET (Ref # 92039)	92039-0776	20
RIVET,6.35X17.9 (Ref # 92039A)	92039-0856	4
PIN,12.4X72.4 (Ref # 92043)	92043-0716	2
KNOB,TAIL GATE (Ref # 92077)	92077-0041	1
SPRING (Ref # 92145)	92145-2268	1
SPRING (Ref # 92145A)	92145-2443	1
SPRING (Ref # 92145B)	92145-2444	1
COLLAR,6.8X20X4.6 (Ref # 92152)	92152-2432	1
COLLAR,6.2X9.5X9.8 (Ref # 92152A)	92152-2917	4
COLLAR,6.2X9.5X6 (Ref # 92152B)	92152-2918	2
COLLAR,6.2X9.5X3.5 (Ref # 92152C)	92152-3860	2
BOLT,SOCKET,6X18 (Ref # 92154)	92154-1026	2
DAMPER,10X20X8 (Ref # 92161)	92161-0855	2
DAMPER,10X34X10 (Ref # 92161A)	92161-1920	5
DAMPER (Ref # 92161B)	92161-2505	2
DAMPER (Ref # 92161C)	92161-2524	4
SCREW,6X16 (Ref # 92172)	92172-0284	4
SCREW,TAPPING,6X16 (Ref # 92172A)	92172-0739	25
SCREW,TAPPING,6X16 (Ref # 92172B)	92172-1470	23
SCREW,TAPPING,6X16 (Ref # 92172C)	92172-1471	11
BOLT-FLANGED,5X10 (Ref # 130)	130BA0510	2
BOLT-FLANGED,6X14 (Ref # 130A)	130BA0614	12
BOLT-FLANGED,6X18 (Ref # 130B)	130BB0618	4
BOLT-FLANGED,6X22 (Ref # 130C)	130BB0622	4

© 2026 Kawasaki Motors Corp., U.S.A.

2025 RIDGE® XR CREW LIMITED HVAC

Kawasaki
Let the Good Times Roll®

PARTS LIST

Carrier(s)

ITEM NAME	PART NUMBER	QUANTITY
BOLT-FLANGED,6X18 (Ref # 130D)	130CB0618	8
PIN-SNAP,12MM (Ref # 554)	554DA1200	2

© 2026 Kawasaki Motors Corp., U.S.A.