1996 Ninja® ZX™-7R

PARTS DIAGRAM

Ignition System

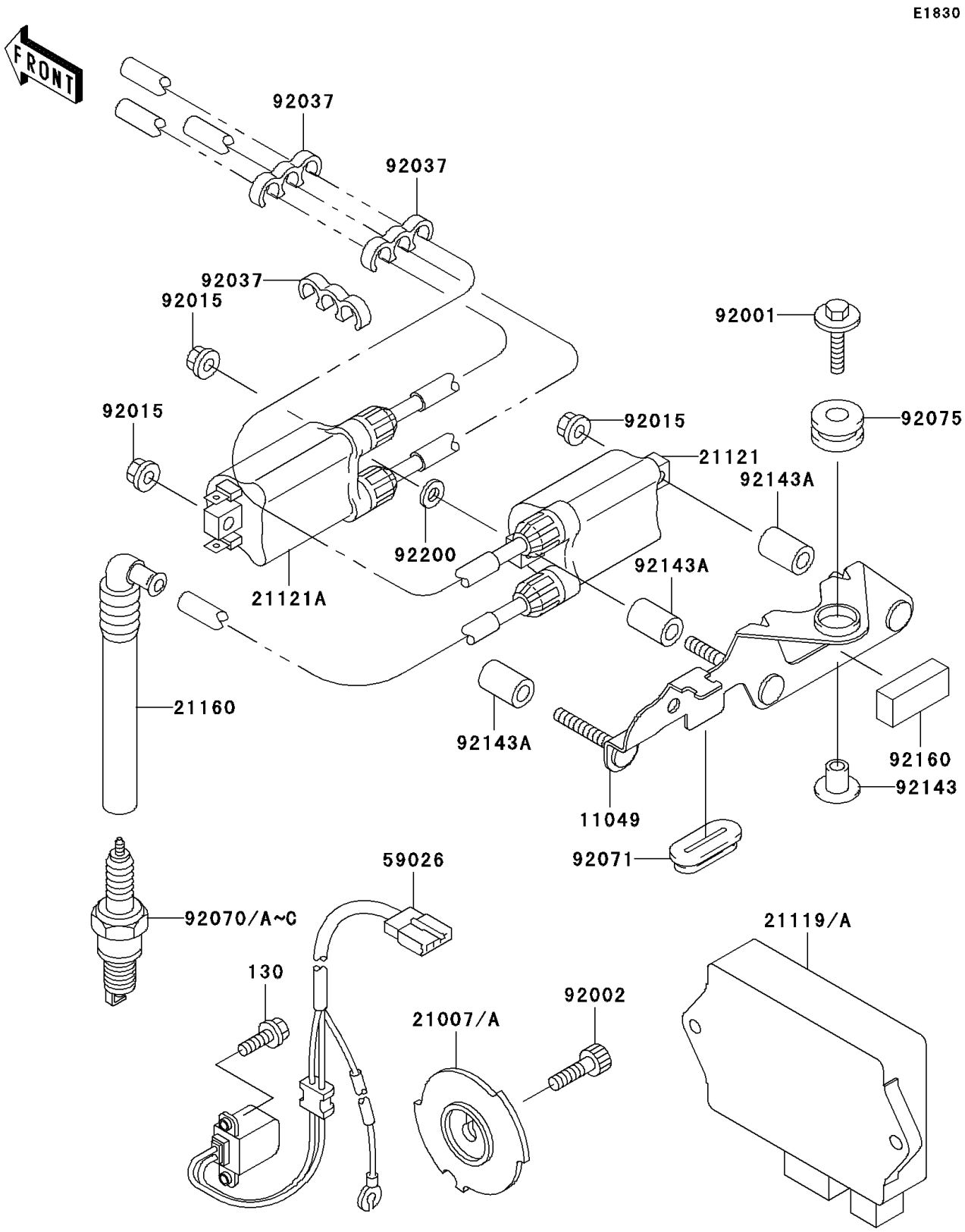

© 2026 Kawasaki Motors Corp., U.S.A.

1996 Ninja® ZX™-7R

PARTS LIST

Ignition System

ITEM NAME	PART NUMBER	QUANTITY

© 2026 Kawasaki Motors Corp., U.S.A.