2025 RIDGE® CREW HVAC

PARTS DIAGRAM

Chassis Electrical Equipment

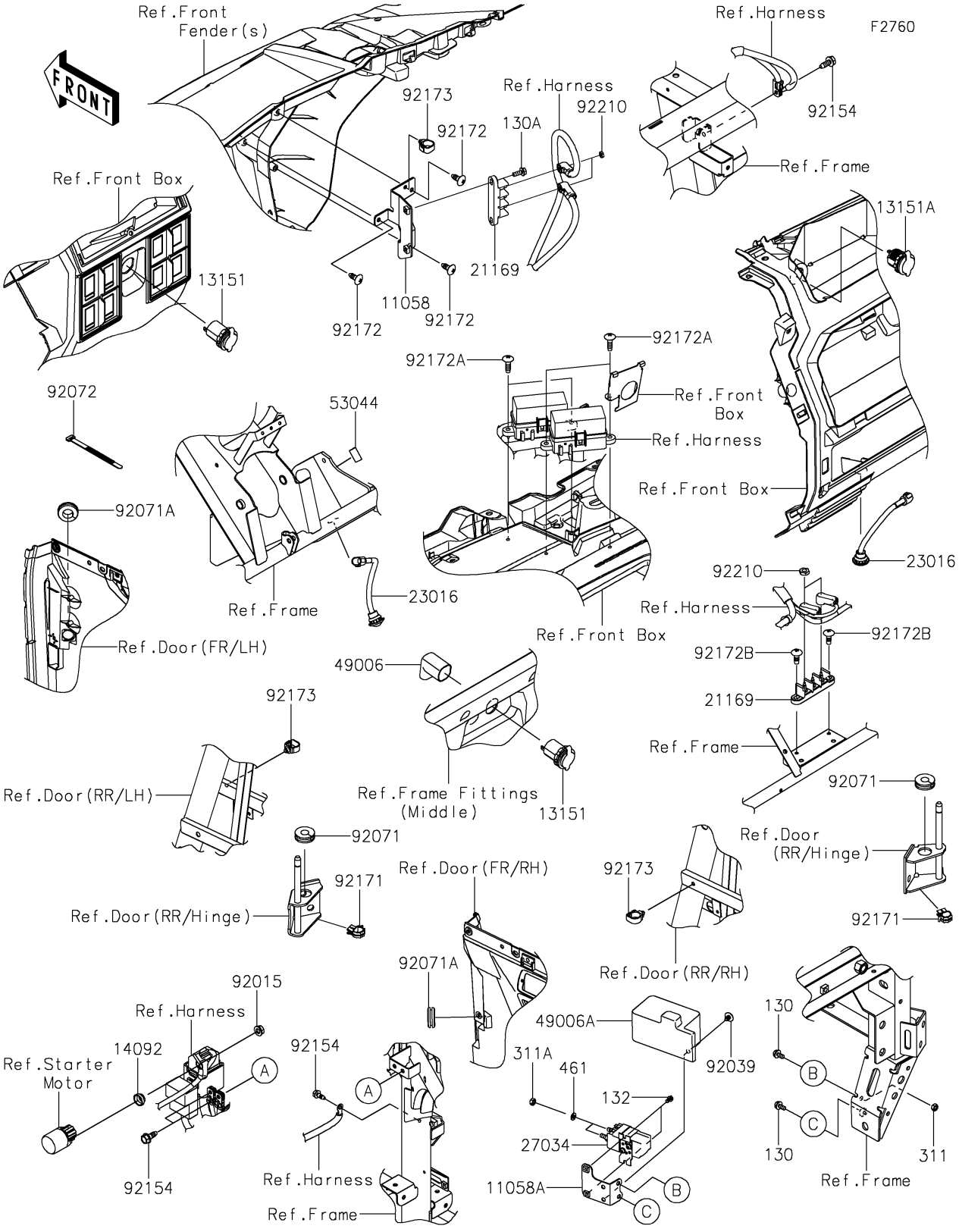

© 2026 Kawasaki Motors Corp., U.S.A.

2025 RIDGE® CREW HVAC

PARTS LIST

Chassis Electrical Equipment

ITEM NAME	PART NUMBER	QUANTITY
BRACKET,TERMINAL (Ref # 11058)	11058-1926	1
BRACKET (Ref # 11058A)	11058-4235	1
SWITCH-COMP,OUTLET,12V (Ref # 13151)	13151-0556	2
SWITCH-COMP,USB-SOCKET (Ref # 13151A)	13151-0601	1
COVER,MAGNETIC SW. (Ref # 14092)	14092-0851	1
TERMINAL (Ref # 21169)	21169-0571	2
LAMP-ASSY,FLOOR (Ref # 23016)	23016-0671	2
RELAY (Ref # 27034)	27034-0020	1
BOOT (Ref # 49006)	49006-0672	1
BOOT (Ref # 49006A)	49006-0679	1
TRIM,L=22 (Ref # 53044)	53044-7503	1
NUT,FLANGED,6MM (Ref # 92015)	92015-1367	1
RIVET (Ref # 92039)	92039-0722	1
GROMMET (Ref # 92071)	92071-0029	2
GROMMET (Ref # 92071A)	92071-0847	2
BAND,L=123 (Ref # 92072)	92072-030	2
BOLT,FLANGED,6X16 (Ref # 92154)	92154-0551	4
CLAMP,EDGE CLIP (Ref # 92171)	92171-1722	2
SCREW,6X16 (Ref # 92172)	92172-0284	3
SCREW,TAPPING,6X20 (Ref # 92172A)	92172-0488	4
SCREW,TAPPING,6X16 (Ref # 92172B)	92172-0739	2
CLAMP,HOLDER CLIP (Ref # 92173)	92173-0868	3
NUT (Ref # 92210)	92210-1680	4
BOLT-FLANGED,6X12 (Ref # 130)	130BA0612	2
BOLT-FLANGED,6X16 (Ref # 130A)	130BA0616	2
BOLT-FLANGED-SMALL,5X8 (Ref # 132)	132BA0508	2
NUT-HEX,6MM (Ref # 311)	311AA0600	1
NUT-HEX,6MM (Ref # 311A)	311BA0600	2
WASHER-SPRING,6MM (Ref # 461)	461DA0600	2

© 2026 Kawasaki Motors Corp., U.S.A.