2025 RIDGE® CREW HVAC CAMO

PARTS DIAGRAM

Oil Pump/Oil Filter

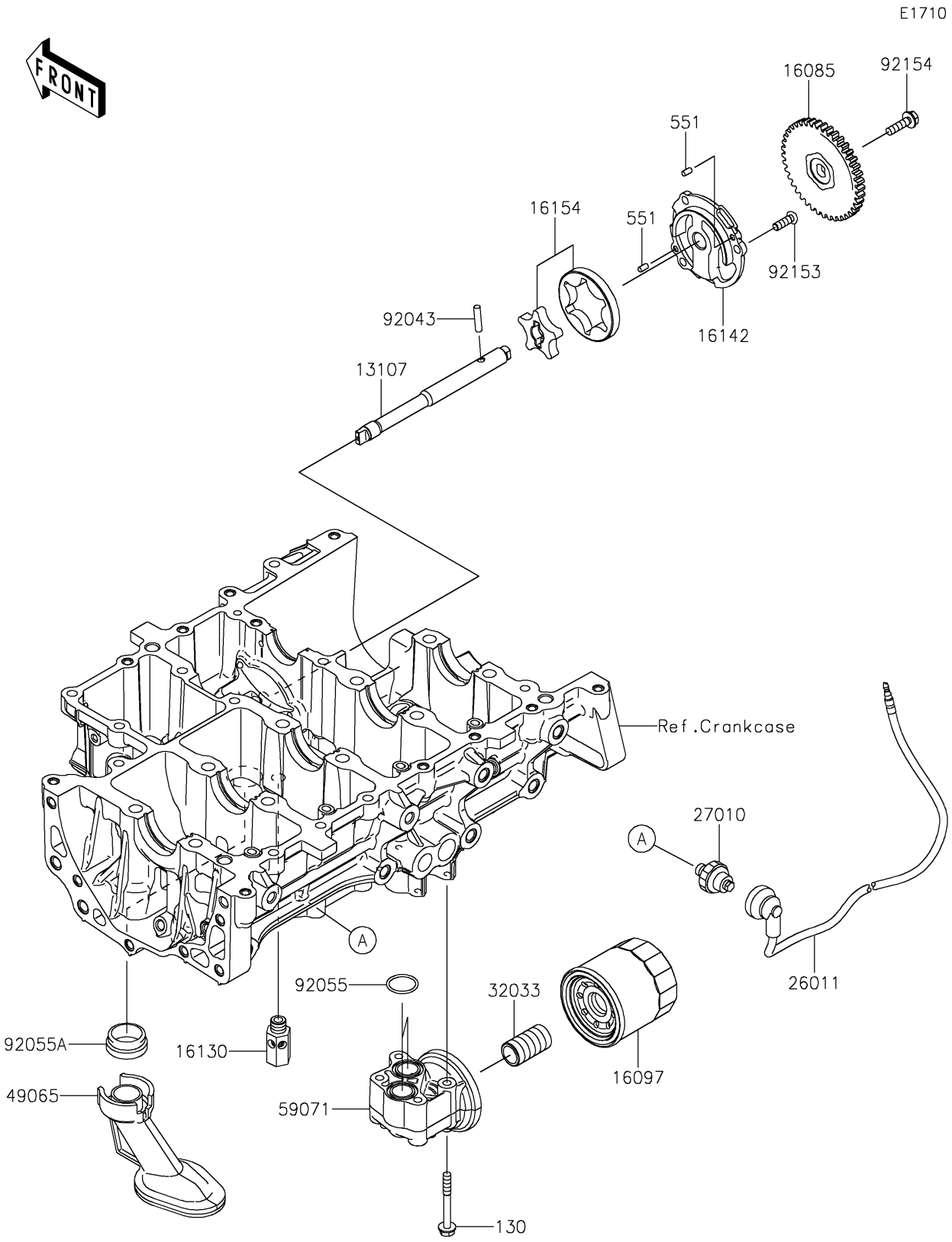

© 2026 Kawasaki Motors Corp., U.S.A.

2025 RIDGE® CREW HVAC CAMO

PARTS LIST

Oil Pump/Oil Filter

ITEM NAME	PART NUMBER	QUANTITY
SHAFT,OIL PUMP (Ref # 13107)	13107-1560	1
GEAR,OIL PUMP,41T (Ref # 16085)	16085-0726	1
FILTER-ASSY-OIL (Ref # 16097)	16097-0007	1
VALVE-ASSY-RELIEF (Ref # 16130)	16130-1058	1
COVER-PUMP (Ref # 16142)	16142-0782	1
ROTOR-PUMP (Ref # 16154)	16154-0791	1
WIRE-LEAD (Ref # 26011)	26011-2434	1
SWITCH,OIL PRESSURE (Ref # 27010)	27010-1313	1
PIPE,OIL FILTER (Ref # 32033)	32033-1535	1
FILTER-OIL (Ref # 49065)	49065-0730	1
JOINT,OIL FILTER (Ref # 59071)	59071-0787	1
PIN,5X21.8 (Ref # 92043)	92043-1518	1
RING-O,20.8X1.9 (Ref # 92055)	92055-0053	2
RING-O,OIL FILTER (Ref # 92055A)	92055-1503	1
BOLT,TORX,6X18 (Ref # 92153)	92153-0454	3
BOLT,FLANGED,6X22 (Ref # 92154)	92154-1525	1
BOLT-FLANGED,6X50 (Ref # 130)	130BA0650	4
PIN-DOWEL,4X8 (Ref # 551)	551A0408	2

© 2026 Kawasaki Motors Corp., U.S.A.