2025 RIDGE® CREW HVAC

PARTS DIAGRAM

Fuel Pump

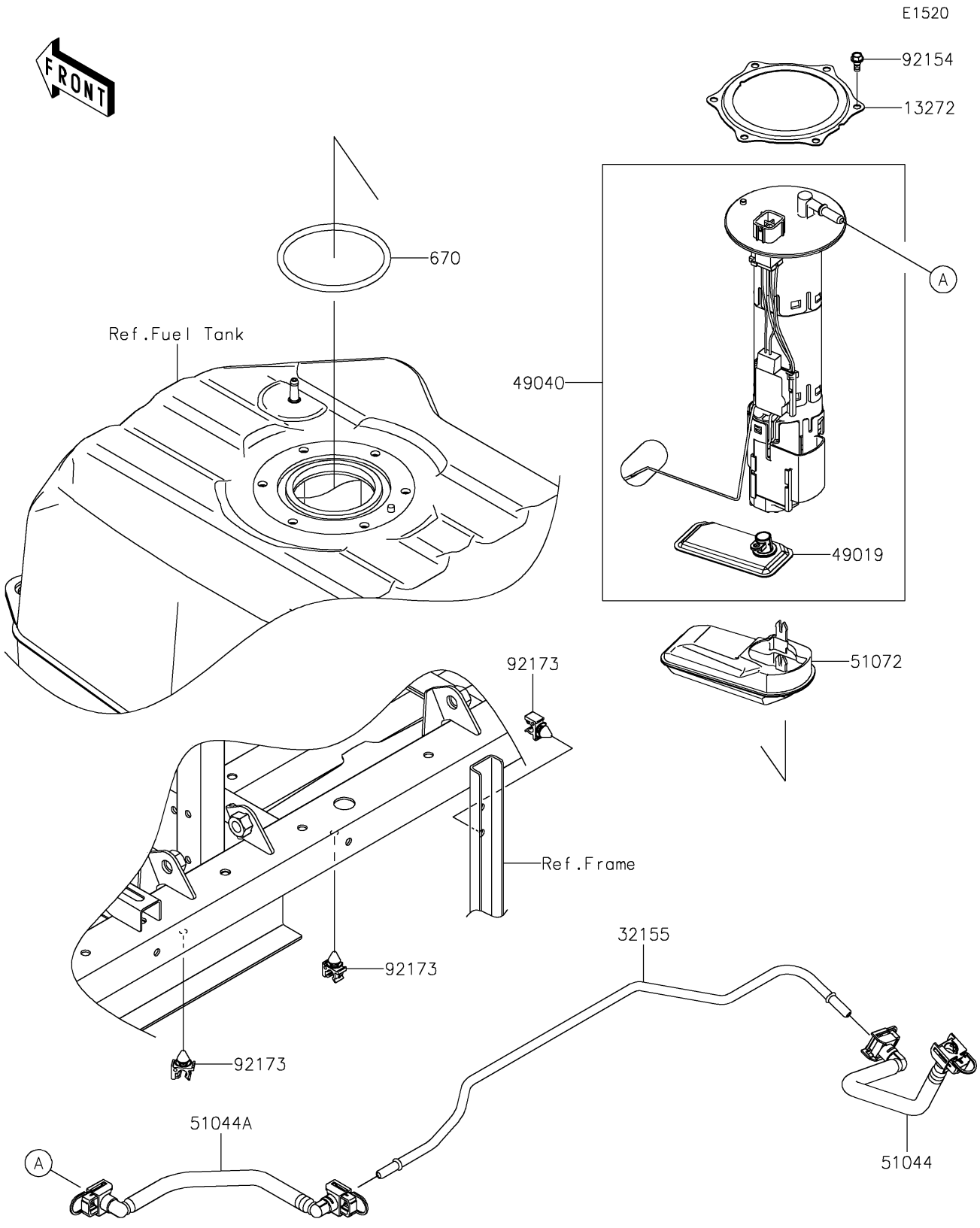

© 2026 Kawasaki Motors Corp., U.S.A.

2025 RIDGE® CREW HVAC

PARTS LIST

Fuel Pump

ITEM NAME	PART NUMBER	QUANTITY
PLATE (Ref # 13272)	13272-2500	1
PIPE,FUEL (Ref # 32155)	32155-7458	1
FILTER-FUEL (Ref # 49019)	49019-0034	1
PUMP-FUEL (Ref # 49040)	49040-0828	1
TUBE-ASSY,PIPE-ENGINE (Ref # 51044)	51044-1240	1
TUBE-ASSY,PUMP-PIPE (Ref # 51044A)	51044-1241	1
CHAMBER-FUEL (Ref # 51072)	51072-0008	1
BOLT,FUEL PUMP (Ref # 92154)	92154-1326	6
CLAMP,FUEL PIPE (Ref # 92173)	92173-1213	3
O RING (Ref # 670)	670E5090	1

© 2026 Kawasaki Motors Corp., U.S.A.