2025 Ninja 500 SE

PARTS DIAGRAM

Chassis Electrical Equipment

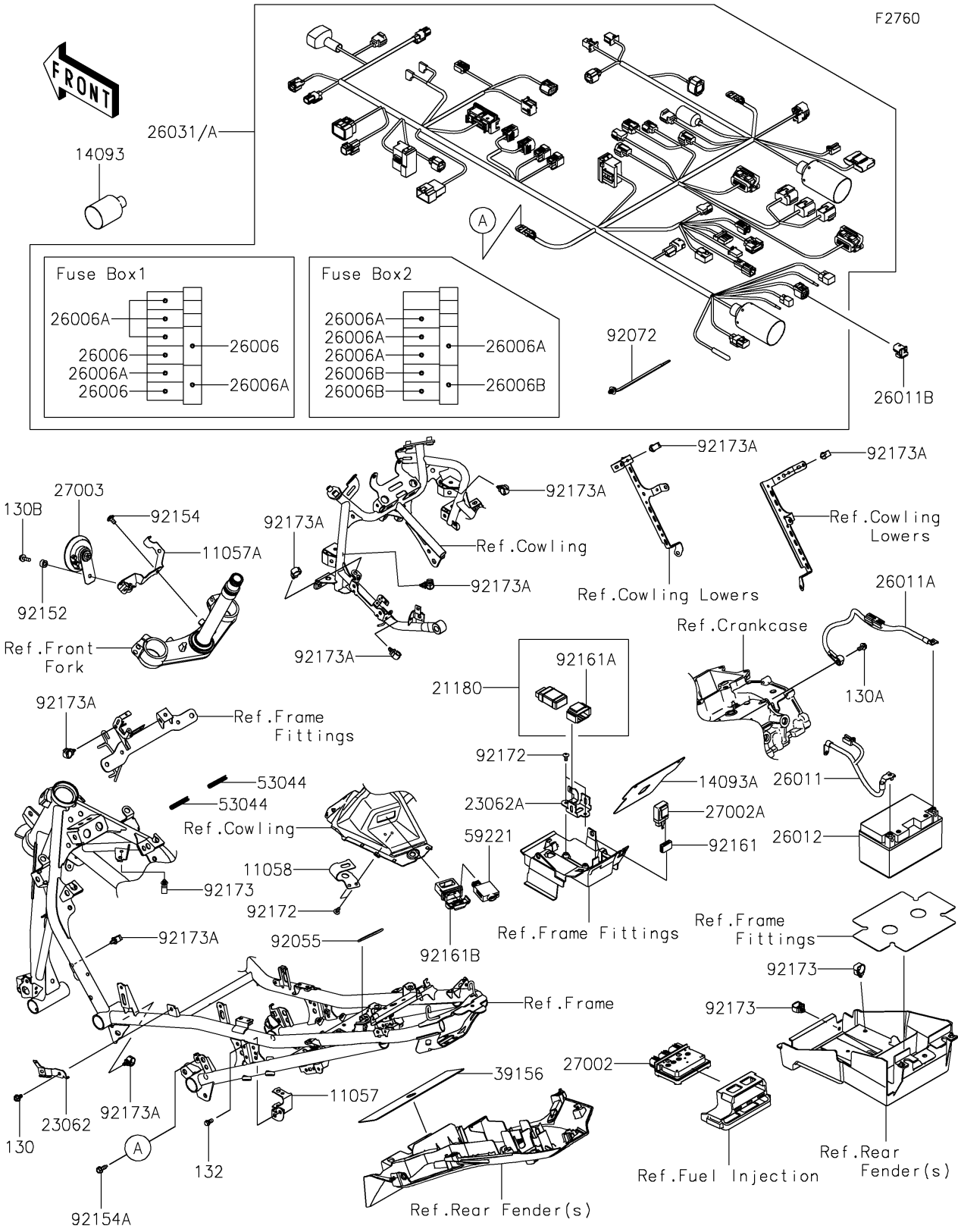

© 2026 Kawasaki Motors Corp., U.S.A.

2025 Ninja 500 SE

PARTS LIST

Chassis Electrical Equipment

ITEM NAME	PART NUMBER	QUANTITY

© 2026 Kawasaki Motors Corp., U.S.A.