1993 Ninja® ZX™-7

PARTS DIAGRAM

Clutch

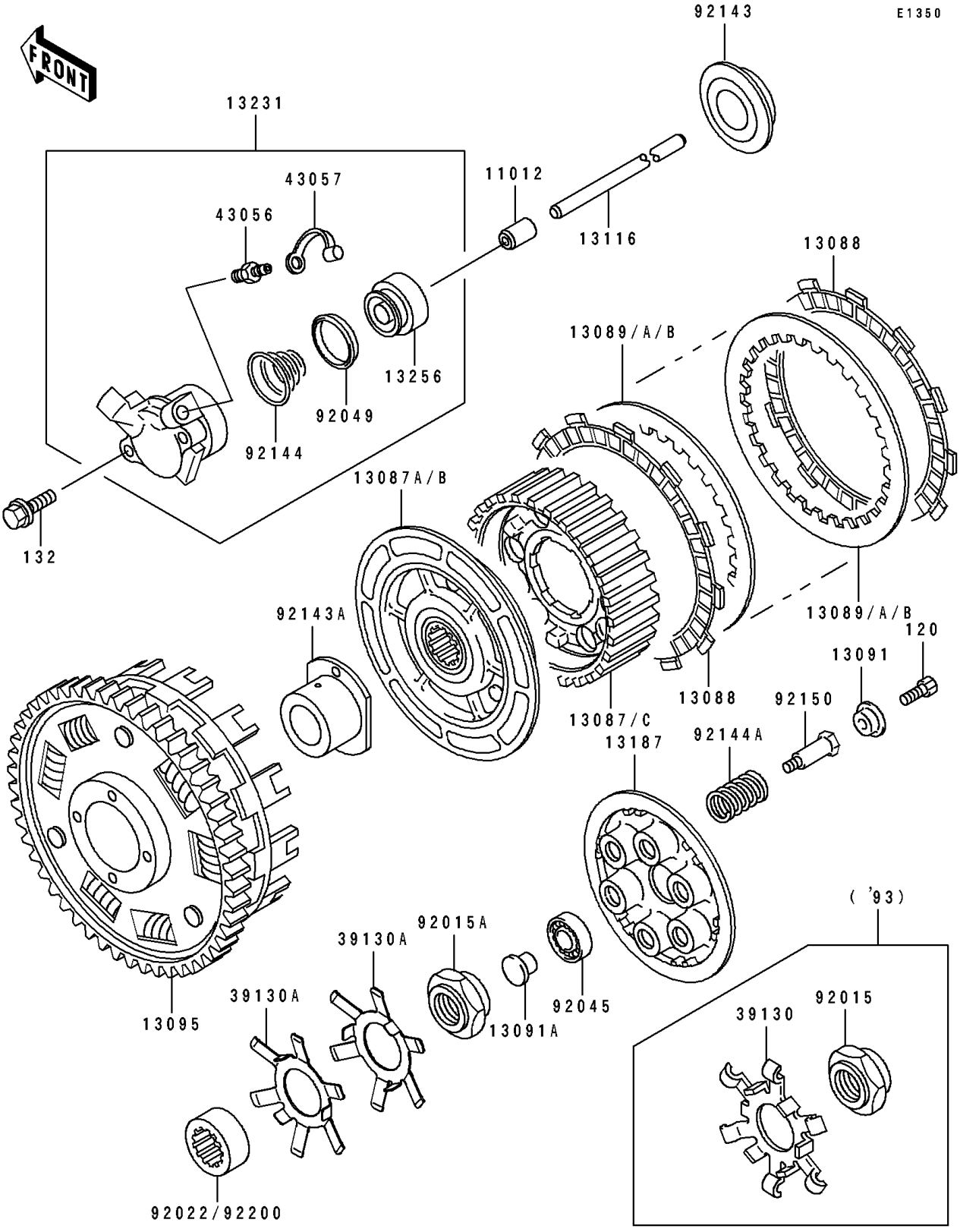

© 2026 Kawasaki Motors Corp., U.S.A.

1993 Ninja® ZX™-7

PARTS LIST

Clutch

ITEM NAME	PART NUMBER	QUANTITY
CAP,PUSHROD (Ref # 11012)	11012-1569	1
HUB-CLUTCH (Ref # 13087)	13087-1130	1
HUB-CLUTCH (Ref # 13087A)	13087-1132	1
PLATE-FRICTION (Ref # 13088)	13088-040	8
PLATE-CLUTCH,T=2.0 (Ref # 13089)	13089-026	AR
PLATE-CLUTCH,T=2.3 (Ref # 13089A)	13089-1004	AR
PLATE-CLUTCH,T=2.6 (Ref # 13089B)	13089-1067	AR
HOLDER,CLUTCH SPRING (Ref # 13091)	13091-1041	6
HOLDER,CLUTCH PUSH ROD (Ref # 13091A)	13091-1085	1
HOUSING-COMP-CLUTCH (Ref # 13095)	13095-1262	1
ROD-PUSH (Ref # 13116)	13116-1141	1
PLATE-CLUTCH OPERATING (Ref # 13187)	13187-1067	1
RELEASE-ASSY-CLUTCH (Ref # 13231)	13231-1065	1
PISTON (Ref # 13256)	13256-1052	1
SPRING-LEAF (Ref # 39130)	39130-1063	1
BREATHER-BRAKE (Ref # 43056)	43056-1052	1
CAP-BREATHER (Ref # 43057)	43057-1001	1
NUT (Ref # 92015)	92015-1538	1
WASHER,TOOTHED,21.7X36X15.5 (Ref # 92022)	92022-1782	1
BEARING-BALL,6001C3ML01 (Ref # 92045)	92045-1235	1
SEAL-OIL,PISTON (Ref # 92049)	92049-1165	1
COLLAR (Ref # 92143)	92143-1468	1
COLLAR (Ref # 92143A)	92143-1638	1
SPRING,CLUTCH RELEASE (Ref # 92144)	92144-1084	1
SPRING,CLUTCH (Ref # 92144A)	92144-1630	6
BOLT,CLUTCH (Ref # 92150)	92150-1477	6
BOLT-SOCKET,6X16 (Ref # 120)	120Q0616	6
BOLT-FLANGED-SMALL (Ref # 132)	132J0625	2

© 2026 Kawasaki Motors Corp., U.S.A.