2023 Teryx KRX® 1000 Special Edition

PARTS DIAGRAM

Front Box

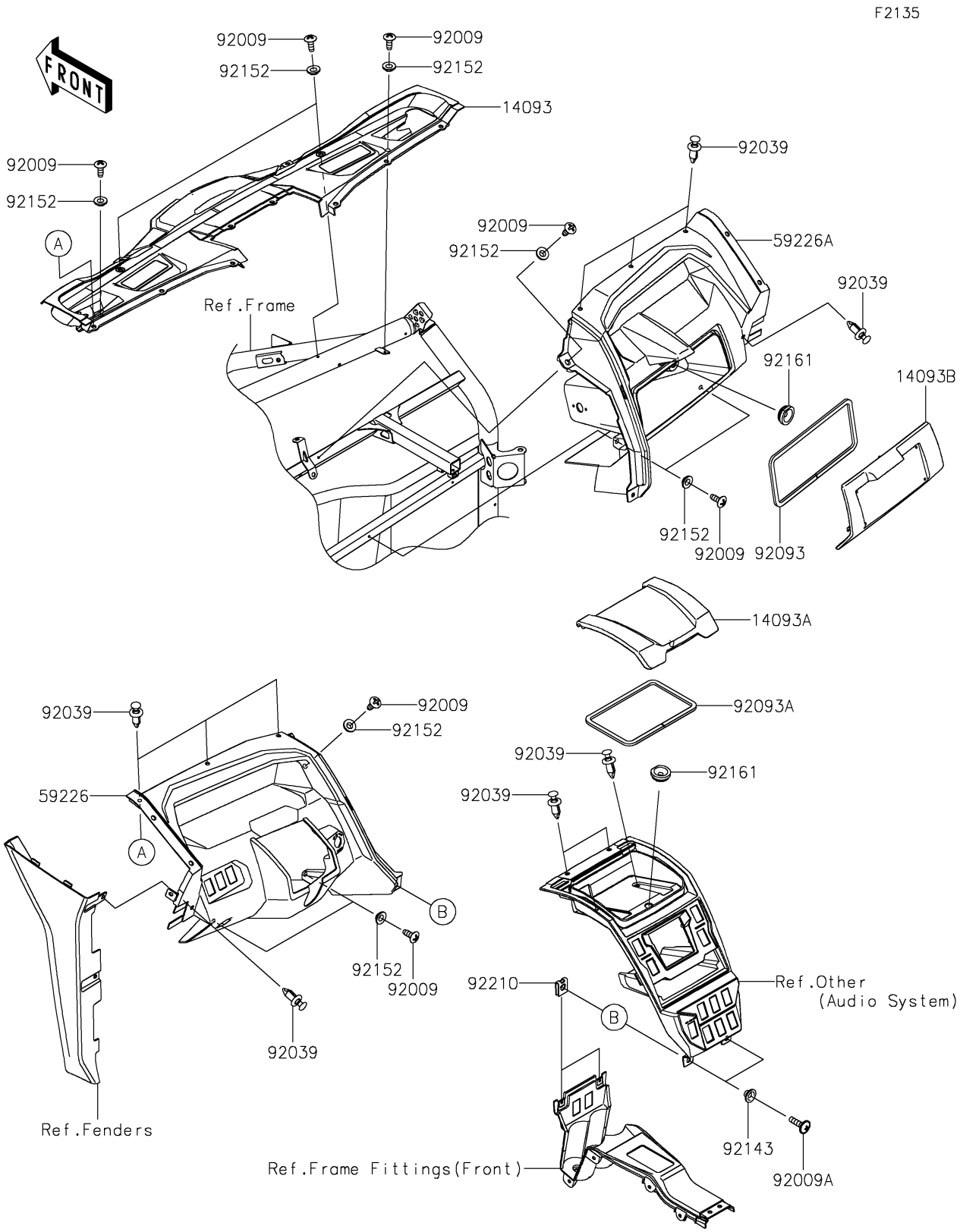

© 2026 Kawasaki Motors Corp., U.S.A.

2023 Teryx KRX® 1000 Special Edition

Kawasaki
Let the Good Times Roll®

PARTS LIST

Front Box

ITEM NAME	PART NUMBER	QUANTITY
COVER (Ref # 14093)	14093-0829	1
COVER,STORAGE,UPP (Ref # 14093A)	14093-0831	1
COVER,STORAGE,LWR (Ref # 14093B)	14093-0832	1
PANEL-CONTROL,LH (Ref # 59226)	59226-0745	1
PANEL-CONTROL,RH (Ref # 59226A)	59226-0760	1
SCREW,TAPPING,6X16 (Ref # 92009)	92009-1166	10
SCREW,6X22,BLACK (Ref # 92009A)	92009-1256	2
RIVET (Ref # 92039)	92039-0776	12
SEAL,10X6X825 (Ref # 92093)	92093-0729	1
SEAL,10X6X725 (Ref # 92093A)	92093-0730	1
COLLAR (Ref # 92143)	92143-1057	2
COLLAR,6.3X9.5X4.1 (Ref # 92152)	92152-1571	10
DAMPER,7.8X30X11 (Ref # 92161)	92161-1953	2
NUT (Ref # 92210)	92210-1125	2

© 2026 Kawasaki Motors Corp., U.S.A.