2024 BRUTE FORCE® 750

PARTS DIAGRAM

Rear Hub

Kawasaki
Let the Good Times Roll®

F2240

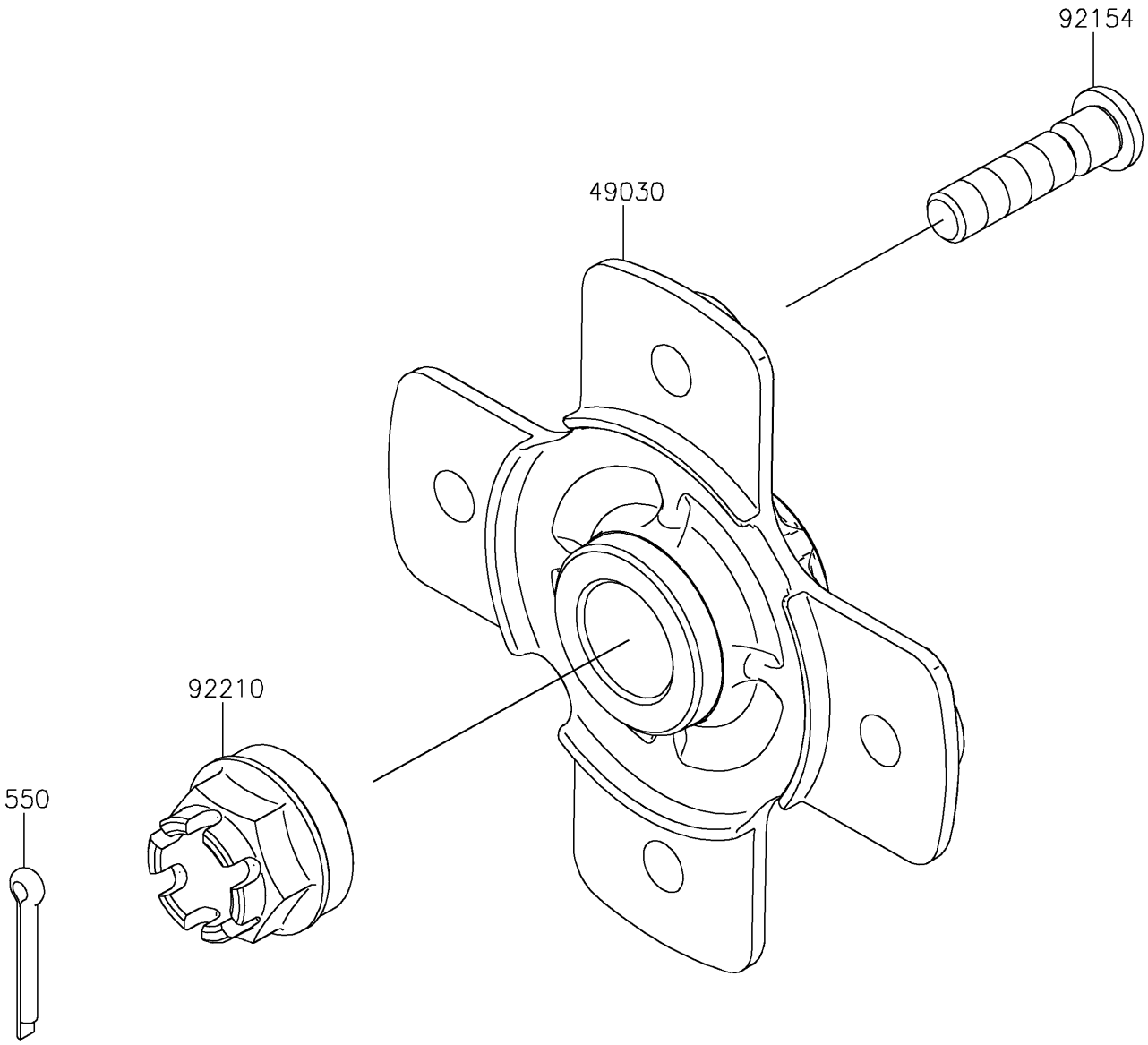

© 2026 Kawasaki Motors Corp., U.S.A.

2024 BRUTE FORCE® 750

PARTS LIST

Rear Hub

ITEM NAME	PART NUMBER	QUANTITY

© 2026 Kawasaki Motors Corp., U.S.A.