2026 KX™250X

PARTS DIAGRAM

Crankshaft

E1321

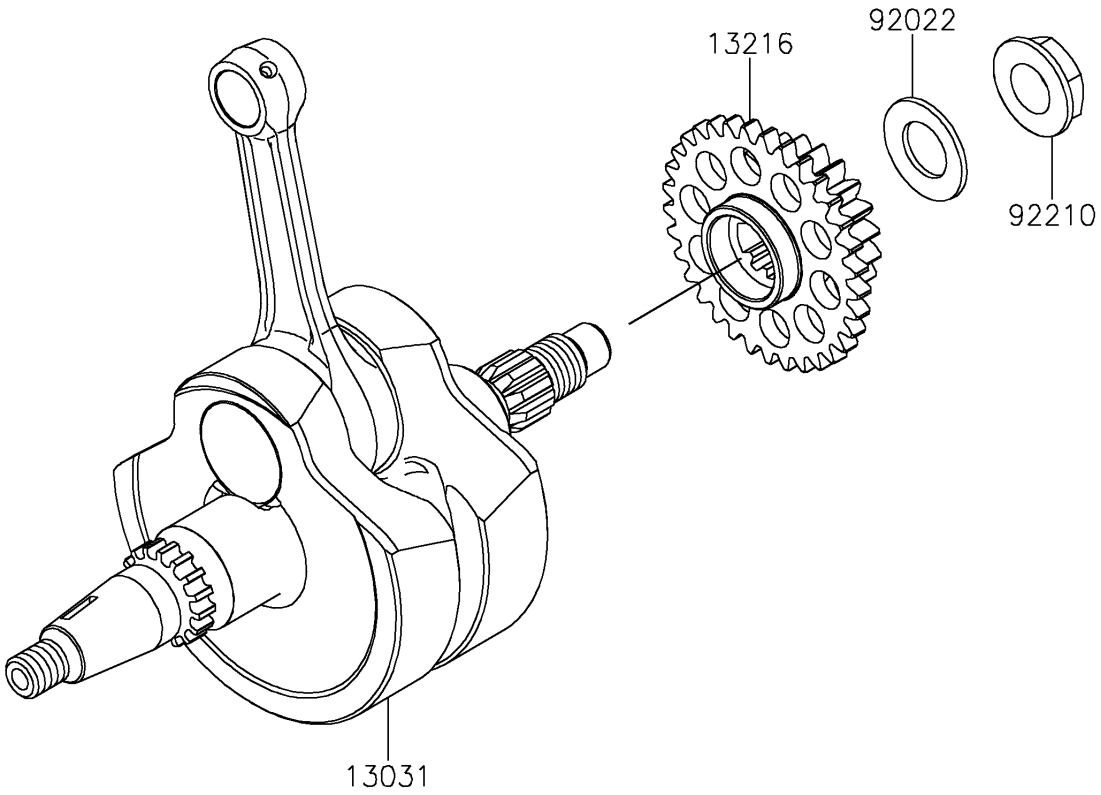

© 2026 Kawasaki Motors Corp., U.S.A.

2026 KX™250X

PARTS LIST

Crankshaft

ITEM NAME	PART NUMBER	QUANTITY
CRANKSHAFT-COMP (Ref # 13031)	13031-1561	1
GEAR-COMP (Ref # 13216)	13216-0925	1
WASHER,16.3X29X1.75 (Ref # 92022)	92022-1356	1
NUT,LEFT HANDED,16MM (Ref # 92210)	92210-0350	1

© 2026 Kawasaki Motors Corp., U.S.A.