2026 KX™250

PARTS DIAGRAM

Throttle

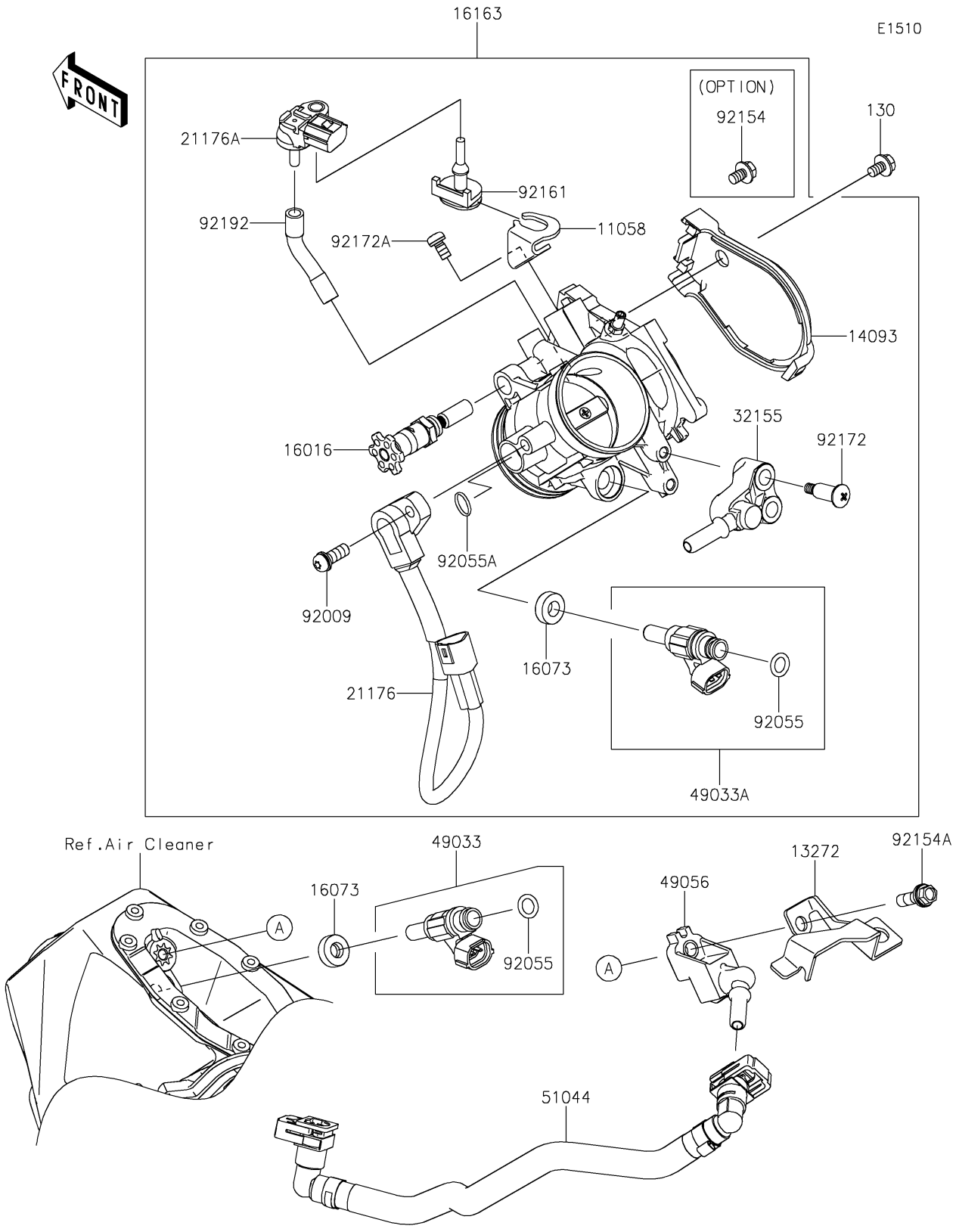

© 2026 Kawasaki Motors Corp., U.S.A.

2026 KX™250

PARTS LIST

Throttle

ITEM NAME	PART NUMBER	QUANTITY
BRACKET (Ref # 11058)	11058-2188	1
PLATE (Ref # 13272)	13272-7264	1
COVER,THROTTLE DUST (Ref # 14093)	14093-0431	1
PLUNGER (Ref # 16016)	16016-0027	1
INSULATOR (Ref # 16073)	16073-0129	2
THROTTLE-ASSY (Ref # 16163)	16163-1332	1
SENSOR,THROTTLE POSITION (Ref # 21176)	21176-0893	1
SENSOR,PRESSURE (Ref # 21176A)	21176-0906	1
PIPE,FUEL (Ref # 32155)	32155-4104	2
NOZZLE-INJECTION (Ref # 49033)	49033-0556	1
NOZZLE-INJECTION (Ref # 49033A)	49033-0565	1
PIPE-INJECTION (Ref # 49056)	49056-0572	1
TUBE-ASSY,FUEL (Ref # 51044)	51044-1298	1
SCREW,THROTTLE SENSOR (Ref # 92009)	92009-1981	1
RING-O,INJECTION NOZZLE (Ref # 92055)	92055-0124	2
RING-O (Ref # 92055A)	92055-1671	1
BOLT (Ref # 92154)	92154-0133	1
BOLT,FLANGED,6X18 (Ref # 92154A)	92154-7736	1
DAMPER (Ref # 92161)	92161-0673	1
SCREW,PIPE INJECTION (Ref # 92172)	92172-0064	2
SCREW (Ref # 92172A)	92172-0393	1
TUBE,3.5X50 (Ref # 92192)	92192-2811	1
BOLT-FLANGED,5X8 (Ref # 130)	130BA0508	1

© 2026 Kawasaki Motors Corp., U.S.A.