2025 KX450X

PARTS DIAGRAM

Fuel Pump

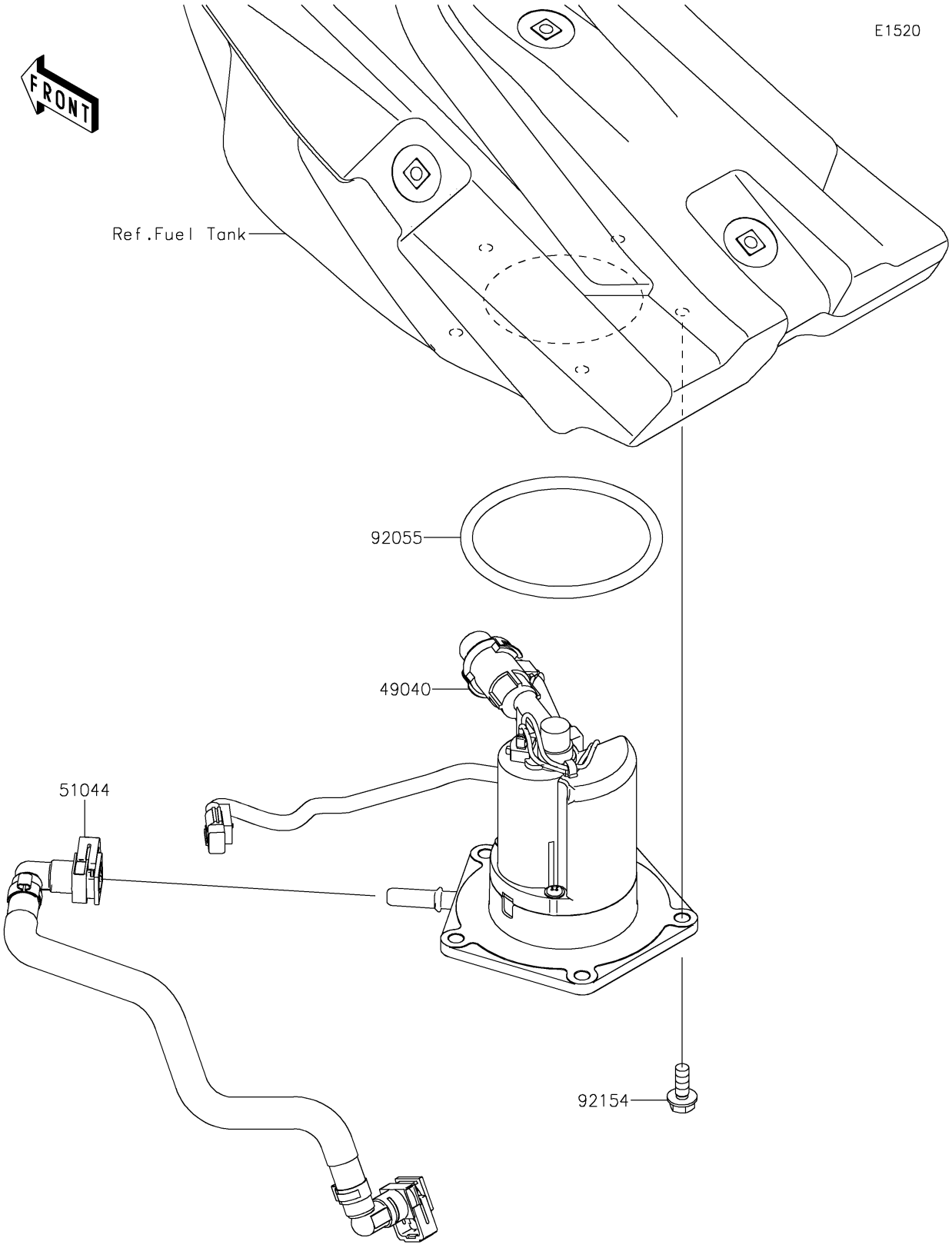

© 2026 Kawasaki Motors Corp., U.S.A.

2025 KX450X

PARTS LIST

Fuel Pump

ITEM NAME	PART NUMBER	QUANTITY
PUMP-FUEL (Ref # 49040)	49040-0839	1
TUBE-ASSY (Ref # 51044)	51044-1253	1
RING-O (Ref # 92055)	92055-0899	1
BOLT,FLANGED,6X16 (Ref # 92154)	92154-0899	5

© 2026 Kawasaki Motors Corp., U.S.A.