2026 KLX300

PARTS DIAGRAM

Accessory(Helmet Lock)

F2910B

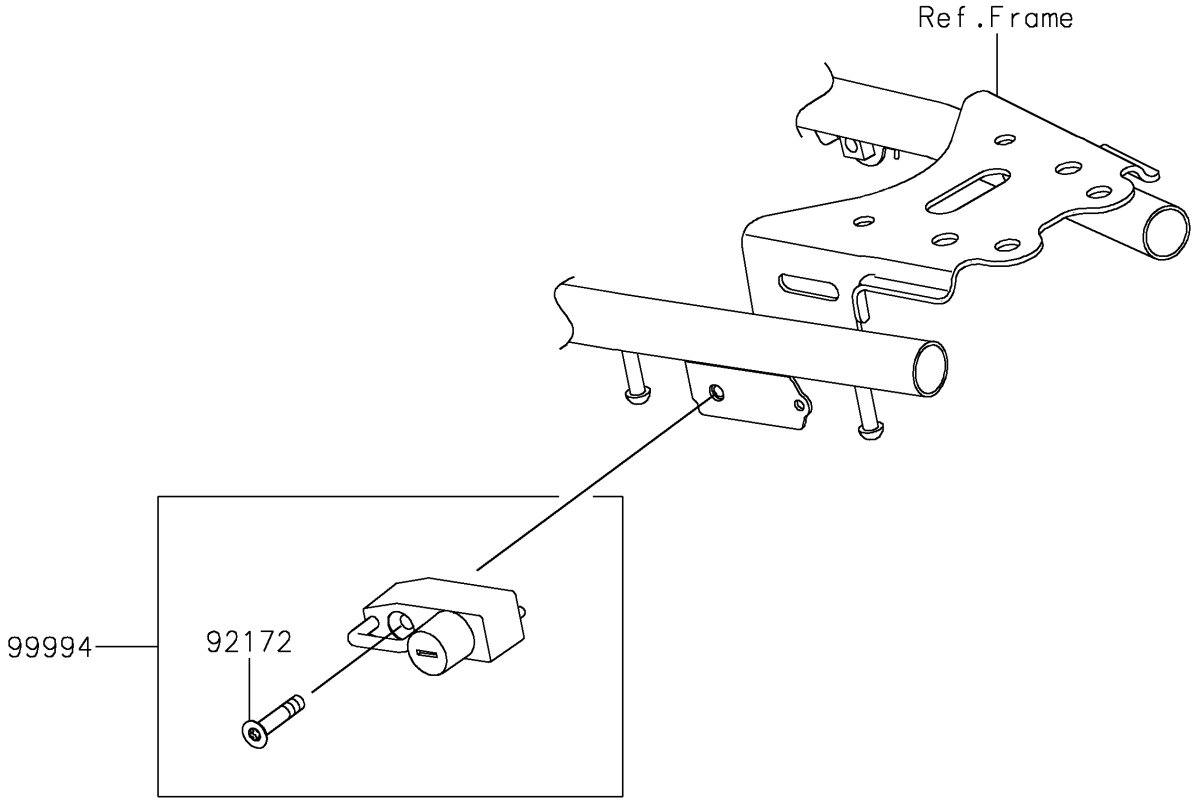

© 2026 Kawasaki Motors Corp., U.S.A.

2026 KLX300

PARTS LIST

Accessory(Helmet Lock)

ITEM NAME	PART NUMBER	QUANTITY
SCREW,HEXLOBE,6X30 (Ref # 92172)	92172-1378	1
HELMET LOCK (Ref # 99994)	99994-2093	1

© 2026 Kawasaki Motors Corp., U.S.A.