2026 KLX300

PARTS DIAGRAM

Turn Signals

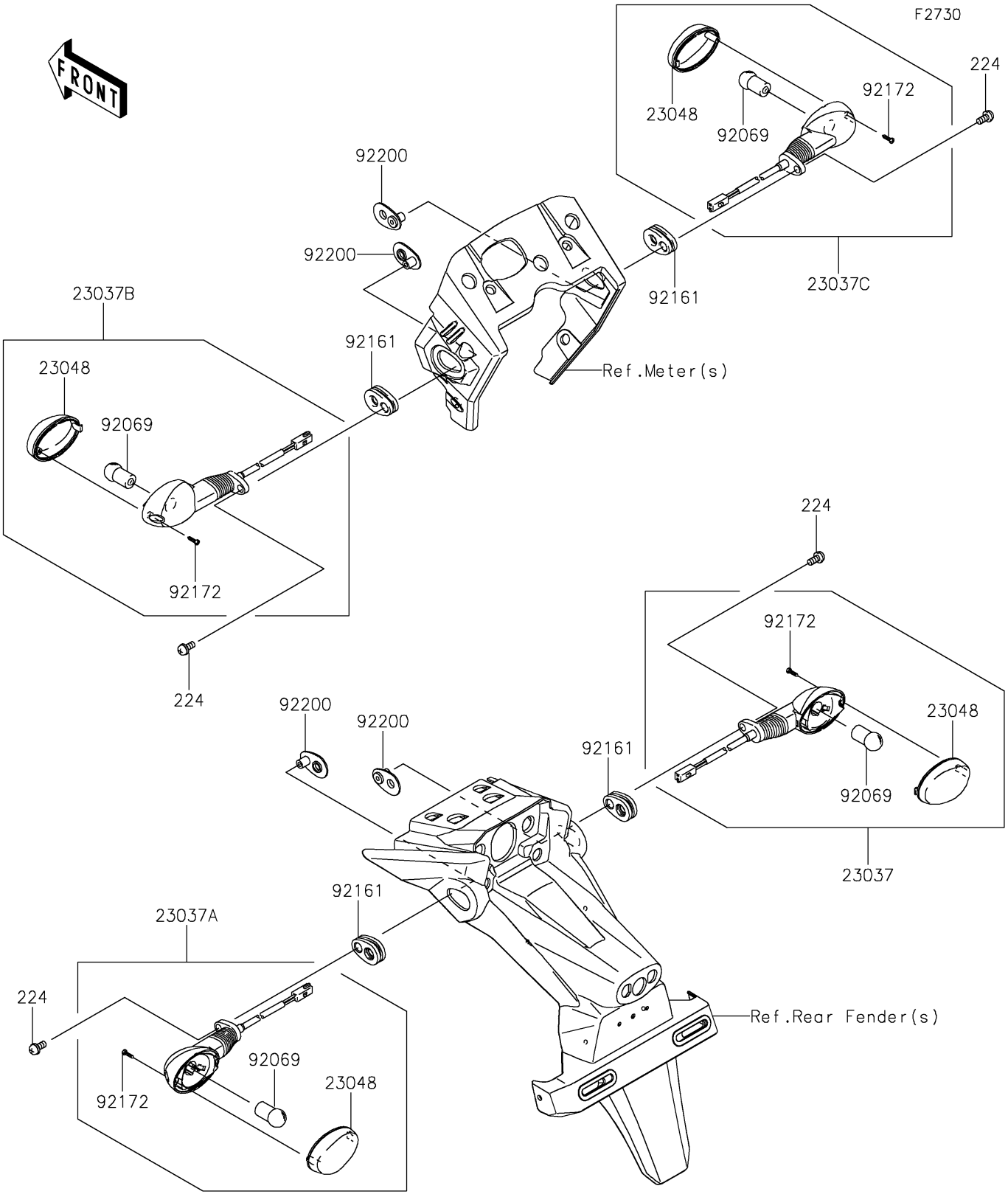

© 2026 Kawasaki Motors Corp., U.S.A.

2026 KLX300

PARTS LIST

Turn Signals

ITEM NAME	PART NUMBER	QUANTITY
LAMP-ASSY-SIGNAL,RR,RH (Ref # 23037)	23037-0416	1
LAMP-ASSY-SIGNAL,RR,LH (Ref # 23037A)	23037-0417	1
LAMP-ASSY-SIGNAL,FR,LH (Ref # 23037B)	23037-0456	1
LAMP-ASSY-SIGNAL,FR,RH (Ref # 23037C)	23037-0457	1
LENS-SIGNAL LAMP (Ref # 23048)	23048-0035	4
BULB,12V 10W (Ref # 92069)	92069-0106	4
DAMPER,SIGNAL LAMP (Ref # 92161)	92161-0828	4
SCREW,TAPPING,2.9X13 (Ref # 92172)	92172-0343	4
WASHER,SIGNAL LAMP (Ref # 92200)	92200-0370	4
SCREW-PAN-WP-CROS,6X14 (Ref # 224)	224AB0614	4

© 2026 Kawasaki Motors Corp., U.S.A.