2026 KLX300

PARTS DIAGRAM

Taillight(s)

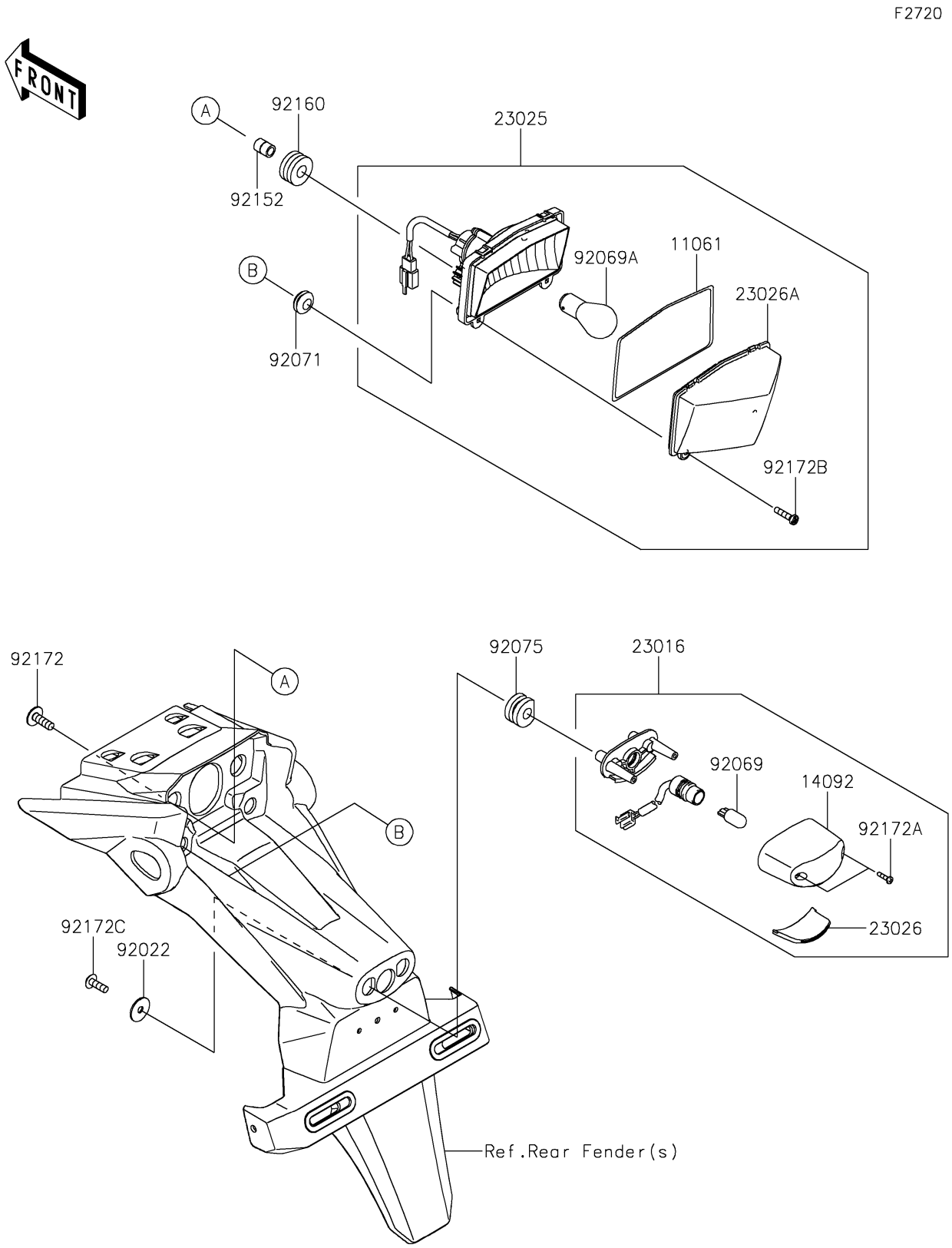

© 2026 Kawasaki Motors Corp., U.S.A.

2026 KLX300

PARTS LIST

Taillight(s)

ITEM NAME	PART NUMBER	QUANTITY
GASKET,TAIL LAMP LENS (Ref # 11061)	11061-0393	1
COVER,LICENSE LAMP (Ref # 14092)	14092-0001	1
LAMP-ASSY,LICENCE (Ref # 23016)	23016-0657	1
LAMP-TAIL (Ref # 23025)	23025-0392	1
LENS,LICENCE LAMP (Ref # 23026)	23026-0035	1
LENS,TAIL LAMP (Ref # 23026A)	23026-0036	1
WASHER,5.5X20X1.2 (Ref # 92022)	92022-104	2
BULB,12V 5W (Ref # 92069)	92069-1016	1
BULB,12V 21/5W (Ref # 92069A)	92069-1084	1
GROMMET (Ref # 92071)	92071-024	2
DAMPER (Ref # 92075)	92075-1870	2
COLLAR,6.8X10X13.5 (Ref # 92152)	92152-3818	2
DAMPER (Ref # 92160)	92160-1162	2
SCREW,6X18 (Ref # 92172)	92172-0192	2
SCREW,TAPPING,2.9X13 (Ref # 92172A)	92172-0343	2
SCREW,4.2X19 (Ref # 92172B)	92172-0411	2
SCREW,TAPPING,5X16 (Ref # 92172C)	92172-0427	2

© 2026 Kawasaki Motors Corp., U.S.A.