2026 KLX300

PARTS DIAGRAM

Rear Brake

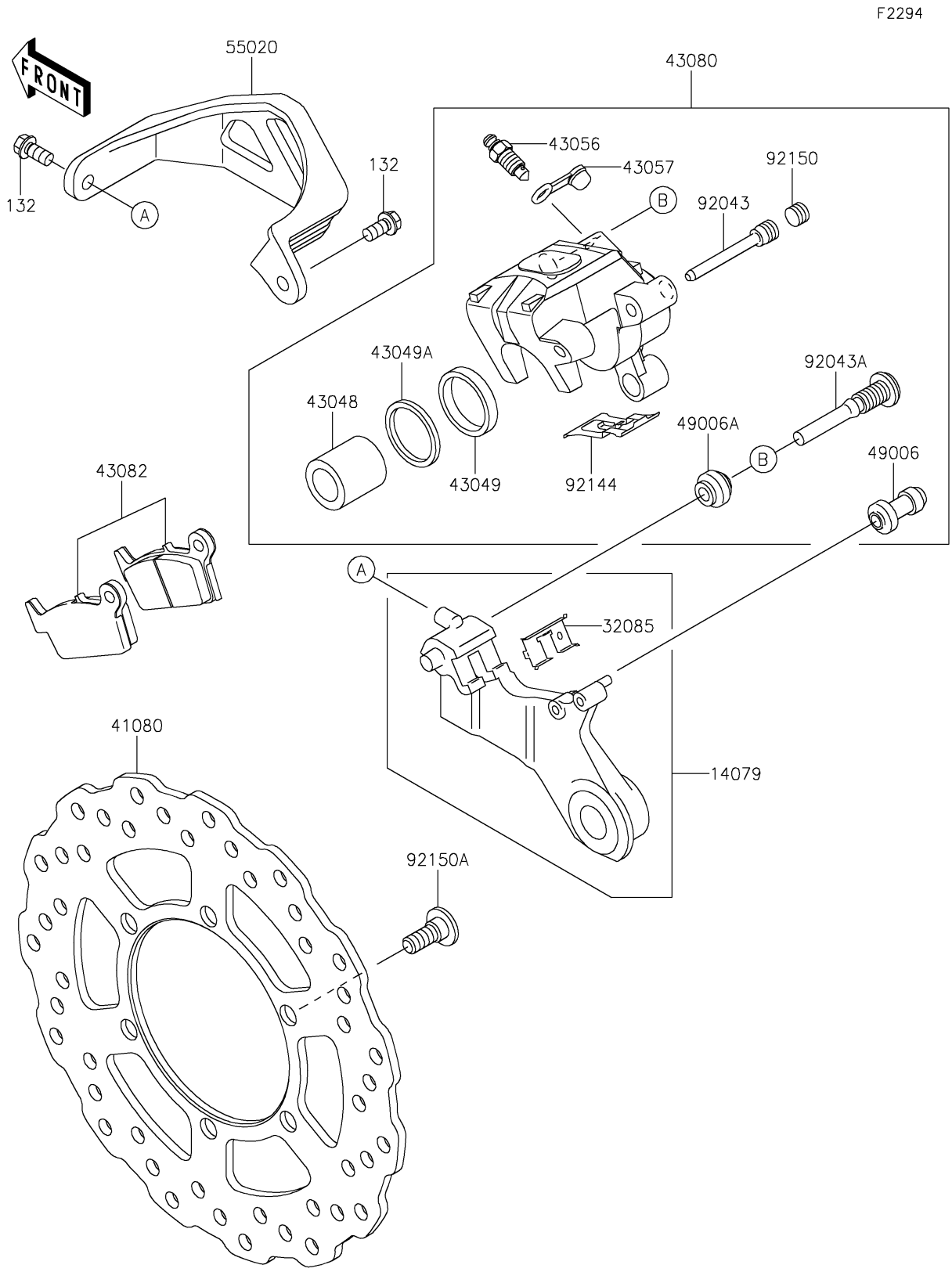

© 2026 Kawasaki Motors Corp., U.S.A.

2026 KLX300

PARTS LIST

Rear Brake

ITEM NAME	PART NUMBER	QUANTITY
HOLDER-ASSY,REAR CALIPER (Ref # 14079)	14079-0030	1
STOPPER,PAD (Ref # 32085)	32085-1386	1
DISC,RR,SILVER (Ref # 41080)	41080-0116-CM	1
PISTON-CALIPER (Ref # 43048)	43048-1068	1
PACKING,PISTON SEAL (Ref # 43049)	43049-1060	1
PACKING,PISTON SEAL (Ref # 43049A)	43049-1061	1
BREATHER-BRAKE (Ref # 43056)	43056-0004	1
CAP-BREATHER (Ref # 43057)	43057-1001	1
CALIPER-SUB-ASSY,RR,SILVER (Ref # 43080)	43080-0237-GN	1
PAD-ASSY-BRAKE (Ref # 43082)	43082-0090	1
BOOT,CALIPER (Ref # 49006)	49006-1088	1
BOOT,CALIPER (Ref # 49006A)	49006-1242	1
GUARD,RR CALIPER,F.BLACK (Ref # 55020)	55020-1488-6Z	1
PIN,HANGER (Ref # 92043)	92043-1507	1
PIN (Ref # 92043A)	92043-1508	1
SPRING,PAD (Ref # 92144)	92144-1819	1
BOLT,PLUG (Ref # 92150)	92150-1692	1
BOLT,DISC PLATE,8X15 (Ref # 92150A)	92150-1811	6
BOLT-FLANGED-SMALL,6X12 (Ref # 132)	132BA0612	2

© 2026 Kawasaki Motors Corp., U.S.A.