2026 KLX300

PARTS DIAGRAM

Front Hub

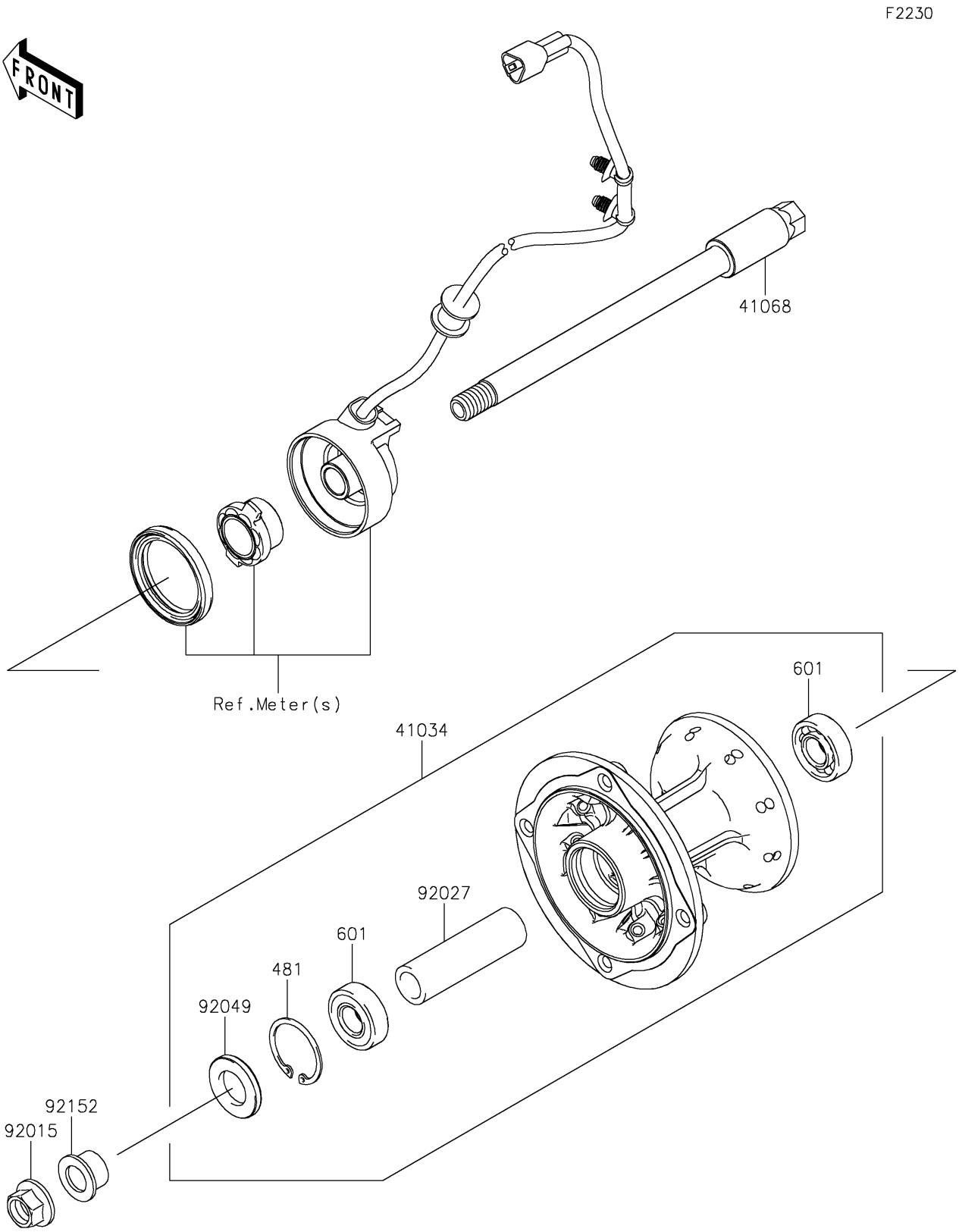

© 2026 Kawasaki Motors Corp., U.S.A.

2026 KLX300

PARTS LIST

Front Hub

ITEM NAME	PART NUMBER	QUANTITY
DRUM-ASSY,FRONT BRAKE (Ref # 41034)	41034-0051	1
AXLE,FR,15X194 (Ref # 41068)	41068-0601	1
NUT,14MM (Ref # 92015)	92015-1407	1
COLLAR,15.2X22.2X75 (Ref # 92027)	92027-1958	1
SEAL-OIL (Ref # 92049)	92049-0136	1
COLLAR,FR AXLE,L=14 (Ref # 92152)	92152-0528	1
CIRCLIP-TYPE-C,35MM (Ref # 481)	481J3500	1
BEARING-BALL,#6202UG (Ref # 601)	601B6202UG	2

© 2026 Kawasaki Motors Corp., U.S.A.