2025 KLX300

PARTS DIAGRAM

Suspension/Shock Absorber

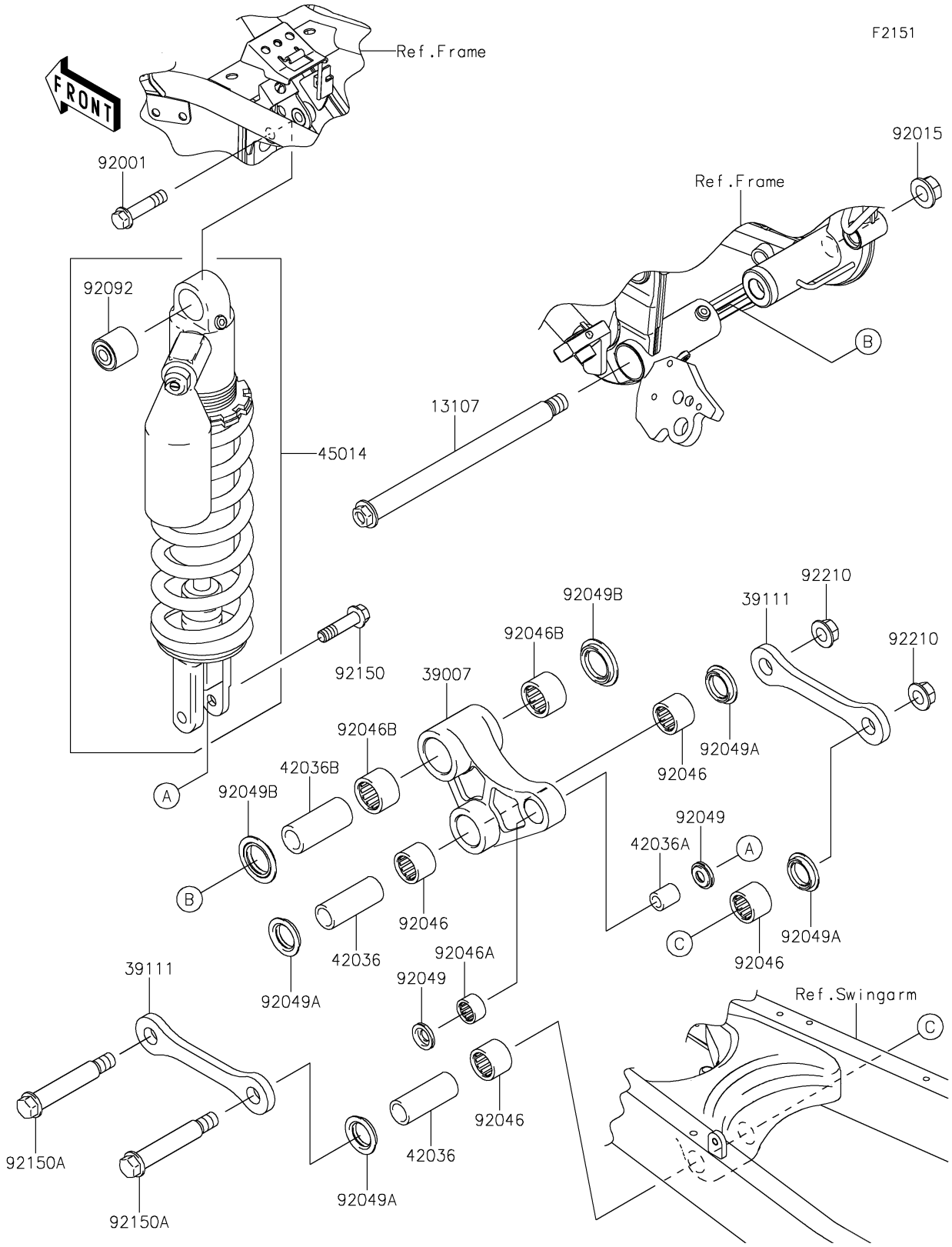

© 2026 Kawasaki Motors Corp., U.S.A.

2025 KLX300

PARTS LIST

Suspension/Shock Absorber

Kawasaki
Let the Good Times Roll®

ITEM NAME	PART NUMBER	QUANTITY
SHAFT,ARM,14MM (Ref # 13107)	13107-0198	1
ARM-SUSP,UNI TRAK (Ref # 39007)	39007-0100	1
ROD-TIE,SUSPENSION (Ref # 39111)	39111-0390	2
SLEEVE,15X22X57 (Ref # 42036)	42036-1245	2
SLEEVE,10X16X19 (Ref # 42036A)	42036-1248	1
SLEEVE,17X25X57 (Ref # 42036B)	42036-1318	1
SHOCKABSORBER (Ref # 45014)	45014-0728	1
BOLT,FLANGED,10X44 (Ref # 92001)	92001-1499	1
NUT,14MM (Ref # 92015)	92015-1407	1
BEARING-NEEDLE,F-2220 (Ref # 92046)	92046-1162	4
BEARING-NEEDLE,16BM2212 (Ref # 92046A)	92046-1192	1
BEARING-NEEDLE,BM2520 (Ref # 92046B)	92046-1228	2
SEAL-OIL (Ref # 92049)	92049-0069	2
SEAL-OIL,MHA22 28 5.7F (Ref # 92049A)	92049-1254	4
SEAL-OIL,MF025N1 (Ref # 92049B)	92049-1426	2
BUSHING-RUBBER,SHOCKABSORBER (Ref # 92092)	92092-1062	1
BOLT,FLANGED,10X40 (Ref # 92150)	92150-1711	1
BOLT,ROD,12X90 (Ref # 92150A)	92150-1812	2
NUT,LOCK,FLANGED,12MM (Ref # 92210)	92210-0348	2

© 2026 Kawasaki Motors Corp., U.S.A.