2024 KLX®300

PARTS DIAGRAM

Swingarm

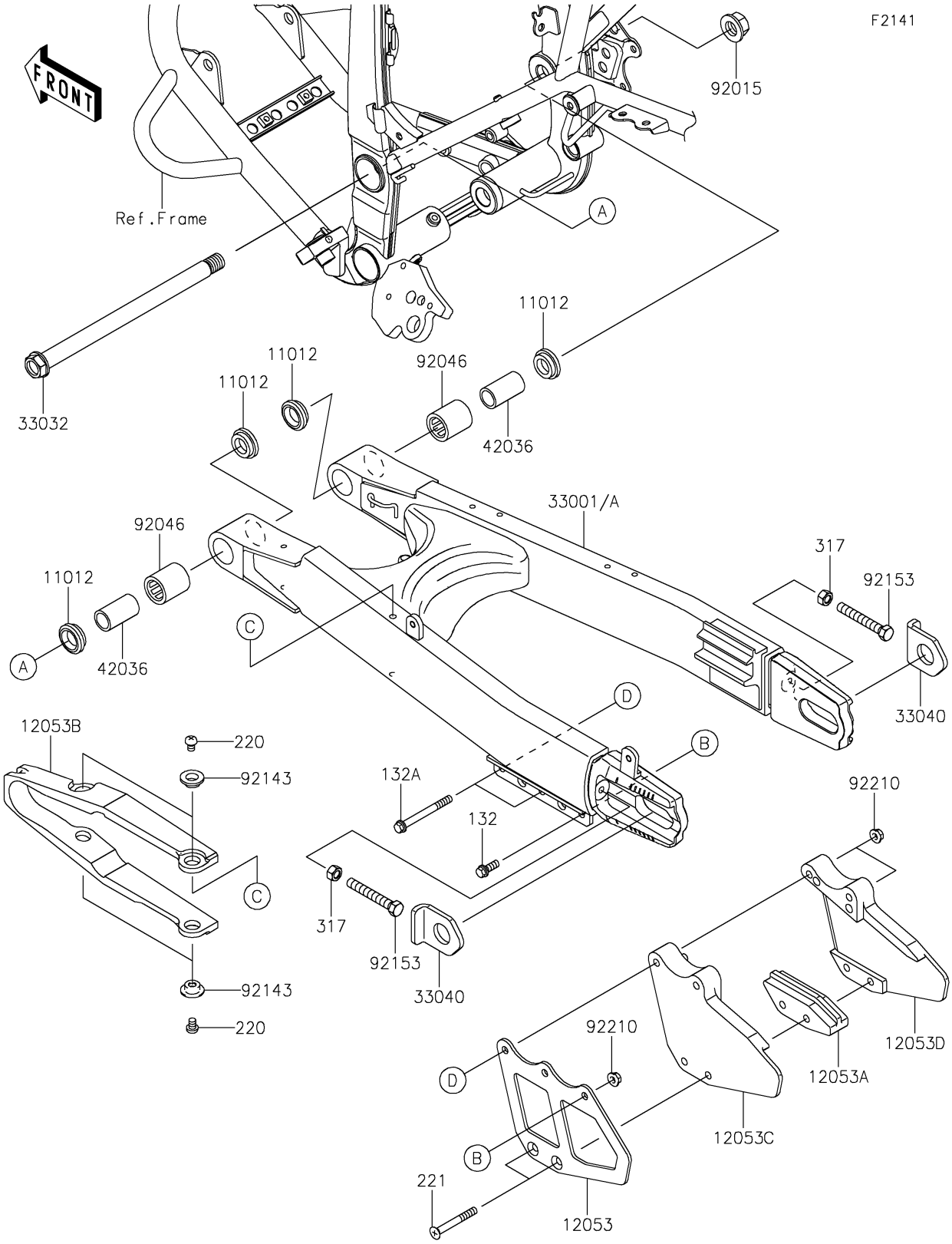

© 2026 Kawasaki Motors Corp., U.S.A.

2024 KLX®300

PARTS LIST

Swingarm

Kawasaki
Let the Good Times Roll®

ITEM NAME	PART NUMBER	QUANTITY
CAP,SWING ARM (Ref # 11012)	11012-1259	4
GUIDE-CHAIN,RR,OUTSIDE (Ref # 12053)	12053-1268	1
GUIDE-CHAIN,DRIVE,RR,INSIDE (Ref # 12053A)	12053-1270	1
GUIDE-CHAIN,DRIVE,FR (Ref # 12053B)	12053-1328	1
GUIDE-CHAIN,DRIVE,RR,OUTSIDE (Ref # 12053C)	12053-1453	1
GUIDE-CHAIN,DRIVE,RR,INSIDE (Ref # 12053D)	12053-1454	1
ARM-COMP-SWING,P.SILVER (Ref # 33001A)	33001-0176-458	1
SHAFT-SWING ARM (Ref # 33032)	33032-0033	1
ADJUSTER-CHAIN (Ref # 33040)	33040-0023	2
SLEEVE,SWING ARM (Ref # 42036)	42036-1064	2
NUT,14MM (Ref # 92015)	92015-1407	1
BEARING-NEEDLE (Ref # 92046)	92046-0038	2
COLLAR (Ref # 92143)	92143-1156	4
BOLT,8X55 (Ref # 92153)	92153-1407	2
NUT,FLANGED,6MM (Ref # 92210)	92210-0630	3
BOLT-FLANGED-SMALL,6X16 (Ref # 132)	132BA0616	1
BOLT-FLANGED-SMALL,6X60 (Ref # 132A)	132BA0660	2
SCREW-PAN-CROS,6X8 (Ref # 220)	220AA0608	4
SCREW-CSK-CROS,6X50 (Ref # 221)	221AA0650	2
NUT-HEX-SMALL,8MM (Ref # 317)	317BA0800	2

© 2026 Kawasaki Motors Corp., U.S.A.