2024 KLX®300

PARTS DIAGRAM

Engine Mount

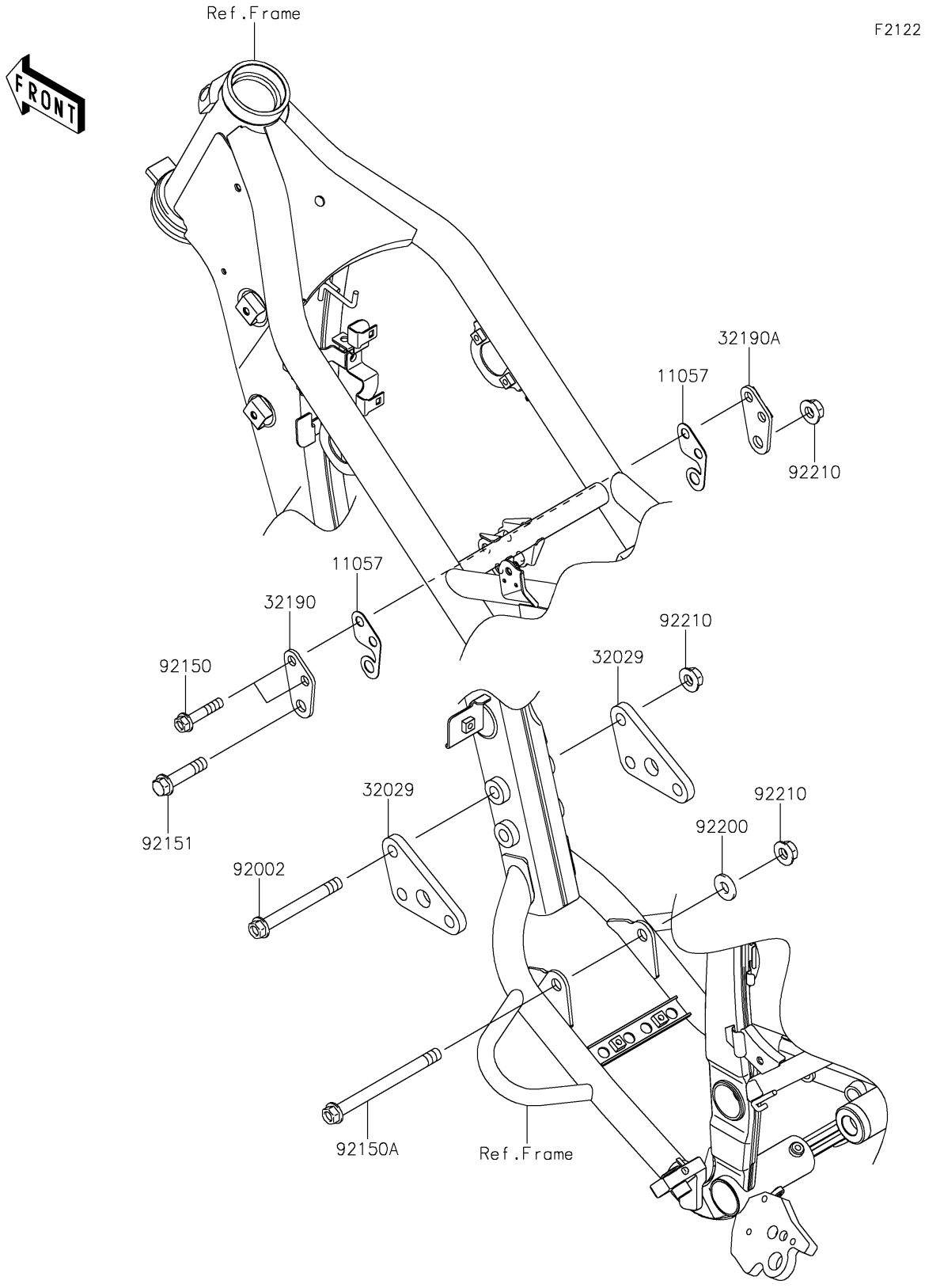

© 2026 Kawasaki Motors Corp., U.S.A.

2024 KLX®300

PARTS LIST

Engine Mount

ITEM NAME	PART NUMBER	QUANTITY
BRACKET (Ref # 11057)	11057-3705	2
BRACKET-ENGINE,FR (Ref # 32029)	32029-1855	2
BRACKET-ENGINE,HEAD,LH (Ref # 32190)	32190-0416	1
BRACKET-ENGINE,HEAD,RH (Ref # 32190A)	32190-0417	1
BOLT,10X90 (Ref # 92002)	92002-1674	3
BOLT,FLANGED,8X42 (Ref # 92150)	92150-1415	2
BOLT,FLANGED,10X120 (Ref # 92150A)	92150-1642	1
BOLT,FLANGED,10X45 (Ref # 92151)	92151-1413	1
WASHER,10.2X23X2.5 (Ref # 92200)	92200-0211	1
NUT,LOCK,FLANGED,10MM (Ref # 92210)	92210-1080	5

© 2026 Kawasaki Motors Corp., U.S.A.