2025 KLX300

PARTS DIAGRAM

Generator

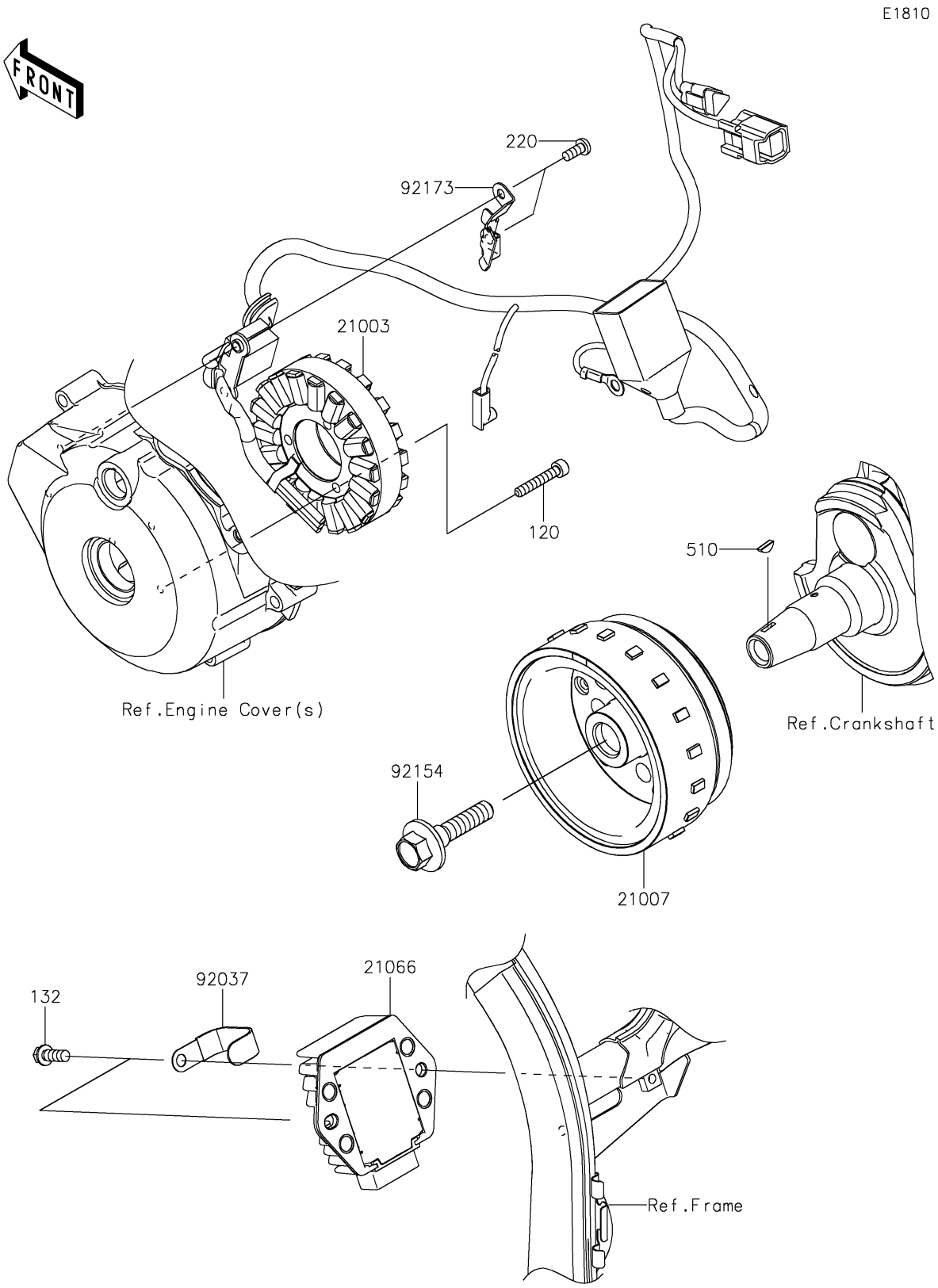

© 2026 Kawasaki Motors Corp., U.S.A.

2025 KLX300

PARTS LIST

Generator

ITEM NAME	PART NUMBER	QUANTITY
STATOR (Ref # 21003)	21003-0231	1
ROTOR (Ref # 21007)	21007-0614	1
REGULATOR-VOLTAGE (Ref # 21066)	21066-0781	1
CLAMP (Ref # 92037)	92037-1993	1
BOLT (Ref # 92154)	92154-1309	1
CLAMP (Ref # 92173)	92173-1150	1
BOLT-SOCKET,5X30 (Ref # 120)	120CA0530	3
BOLT-FLANGED-SMALL,6X16 (Ref # 132)	132BA0616	2
SCREW-PAN-CROS,5X12 (Ref # 220)	220AA0512	2
KEY-WOODRUFF (Ref # 510)	510A3100	1

© 2026 Kawasaki Motors Corp., U.S.A.