2026 KLX300

PARTS DIAGRAM

Gear Change Drum/Shift Fork(s)

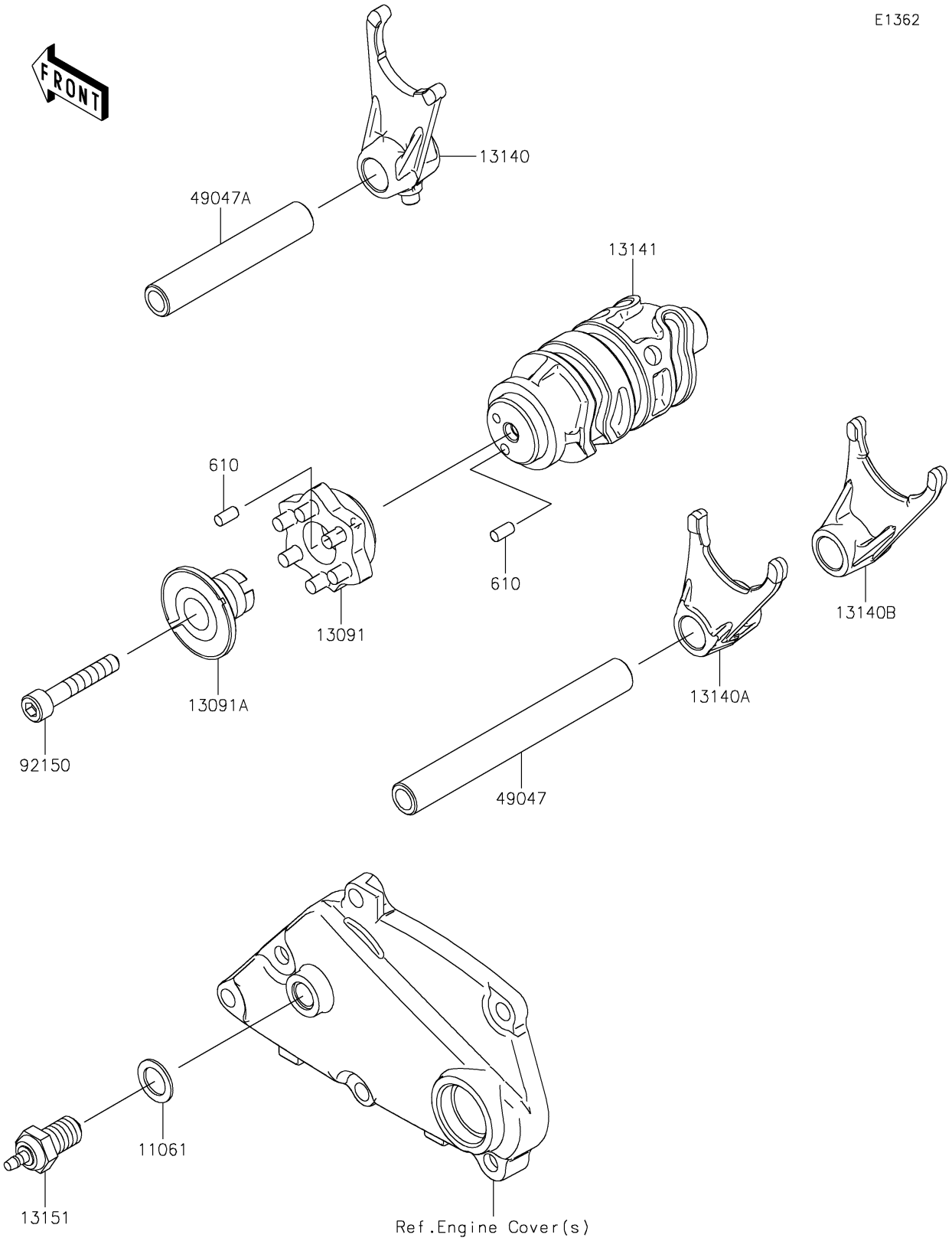

© 2026 Kawasaki Motors Corp., U.S.A.

2026 KLX300

PARTS LIST

Gear Change Drum/Shift Fork(s)

ITEM NAME	PART NUMBER	QUANTITY
GASKET,10.5X16X1 (Ref # 11061)	11061-0373	1
HOLDER,CHANGE DRUM (Ref # 13091)	13091-1856	1
HOLDER,CHANGE DRUM (Ref # 13091A)	13091-1862	1
FORK-SHIFT,5TH&TOP (Ref # 13140)	13140-1216	1
FORK-SHIFT,2ND&3RD (Ref # 13140A)	13140-1217	1
FORK-SHIFT,LOW&4TH (Ref # 13140B)	13140-1218	1
DRUM-CHANGE (Ref # 13141)	13141-0039	1
SWITCH-COMP,NEUTRAL (Ref # 13151)	13151-1102	1
ROD-SHIFT,L=106.7 (Ref # 49047)	49047-1056	1
ROD-SHIFT,L=71.7 (Ref # 49047A)	49047-1057	1
BOLT,SOCKET,6X35 (Ref # 92150)	92150-1484	1
ROLLER,4X8 (Ref # 610)	610A0408	2

© 2026 Kawasaki Motors Corp., U.S.A.