1989 Ninja® ZX™-7

PARTS DIAGRAM

Cylinder Head

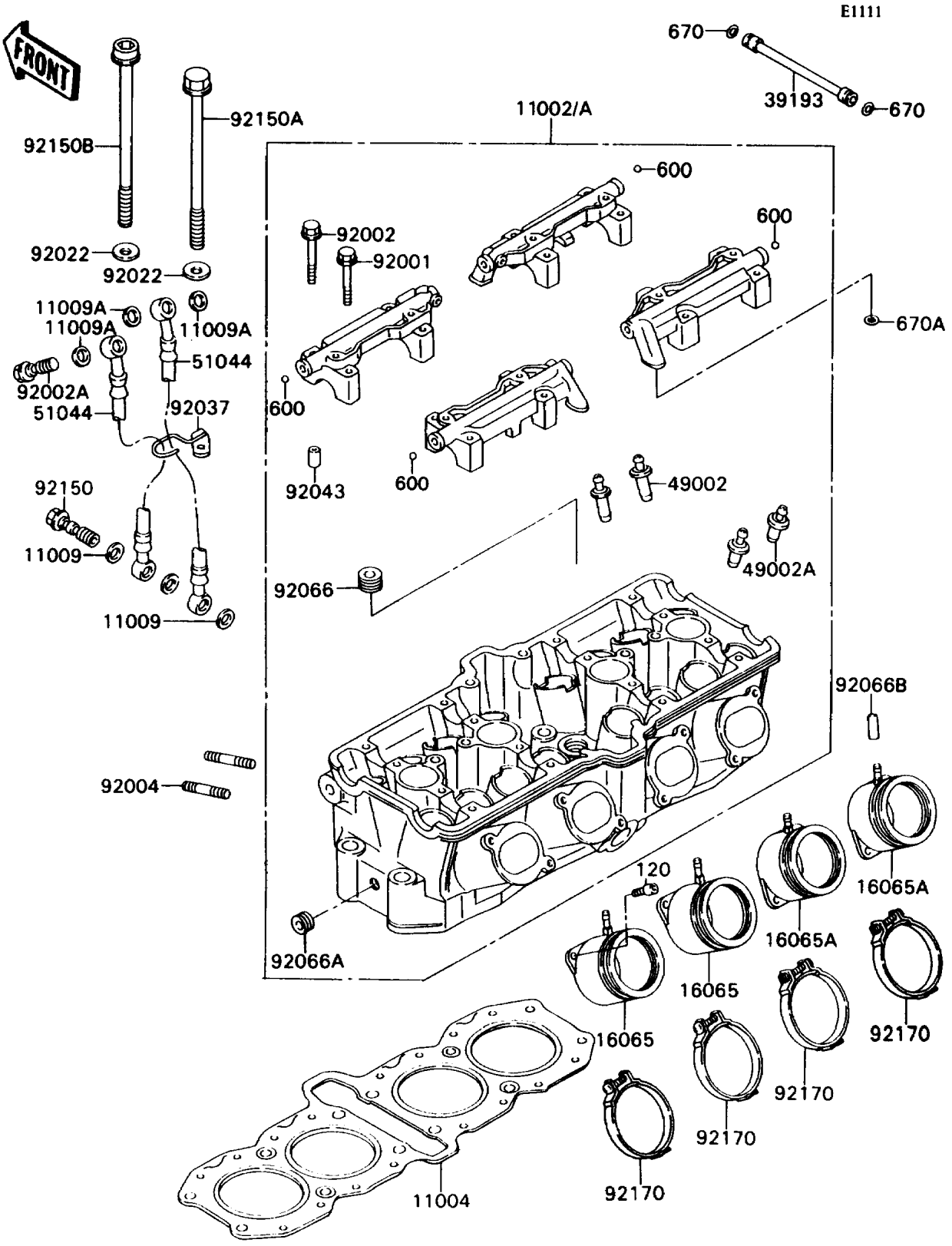

© 2026 Kawasaki Motors Corp., U.S.A.

1989 Ninja® ZX™-7

PARTS LIST

Cylinder Head

ITEM NAME	PART NUMBER	QUANTITY
HEAD-ASSY-CYLINDER (Ref # 11002)	11002-1254	1
HEAD-ASSY-CYLINDER (Ref # 11002A)	11002-1255	1
GASKET-HEAD (Ref # 11004)	11004-1195	1
GASKET,10X14.5X1.5 (Ref # 11009)	11009-1105	3
GASKET,OIL PIPE,8.2X14X1.0 (Ref # 11009A)	11009-1344	4
HOLDER-CARBURETOR,#1&#2 (Ref # 16065)	16065-1187	2
HOLDER-CARBURETOR,#3&#4 (Ref # 16065A)	16065-1188	2
PIPE-OIL (Ref # 39193)	39193-1002	2
GUIDE-VALVE (Ref # 49002)	49002-1060	AR
GUIDE-VALVE (Ref # 49002A)	49002-1097	AR
TUBE-ASSY,OIL PAN-HEAD (Ref # 51044)	51044-1101	2
BOLT,FLANGED,6X38 (Ref # 92001)	92001-1105	8
BOLT,6X46 (Ref # 92002)	92001-1872	8
BOLT,BANJO,8X24 (Ref # 92002A)	92002-1858	2
STUD,8X30,BLACK (Ref # 92004)	92004-1101	8
WASHER,10.5X20X1.6 (Ref # 92022)	92022-1591	12
CLAMP (Ref # 92037)	92037-1802	1
PIN,6.2X8X14 (Ref # 92043)	92043-1263	8
PLUG (Ref # 92066)	92066-1253	4
PLUG (Ref # 92066A)	92066-1262	2
PLUG,12X25 (Ref # 92066B)	92068-006	1
PLUG,12X25 (Ref # 92066B)	92068-006	4
PLUG,12X25 (Ref # 92066B)	92068-006	2
BOLT,BANJO,10X37 (Ref # 92150)	92150-1122	1
BOLT,10X148 (Ref # 92150A)	92150-1239	4
BOLT,SOCKET,10X158 (Ref # 92150B)	92150-1240	8
CLAMP (Ref # 92170)	92170-1066	4
BOLT-SOCKET,6X18 (Ref # 120)	120P0618	8
BALL-STEEL,1/4" (Ref # 600)	600A0800	8

© 2026 Kawasaki Motors Corp., U.S.A.