2025 MULE SX™ 4x4

PARTS DIAGRAM

Decals

F2861

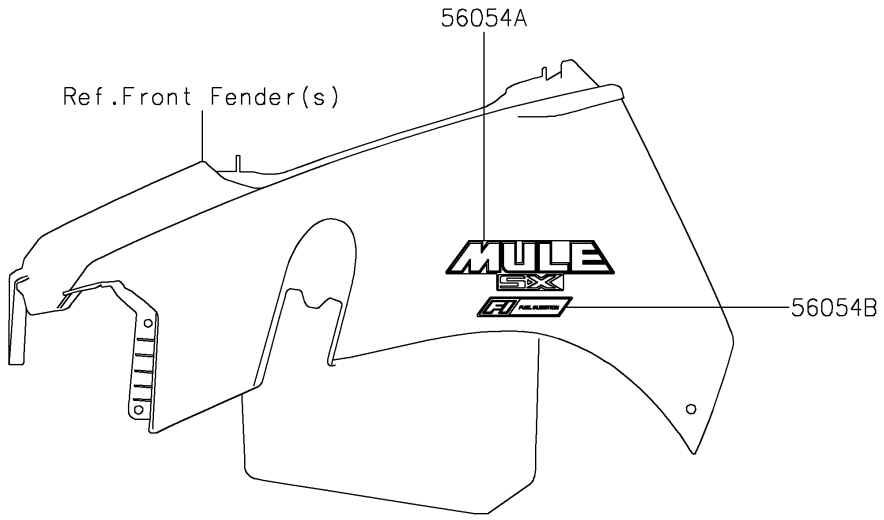

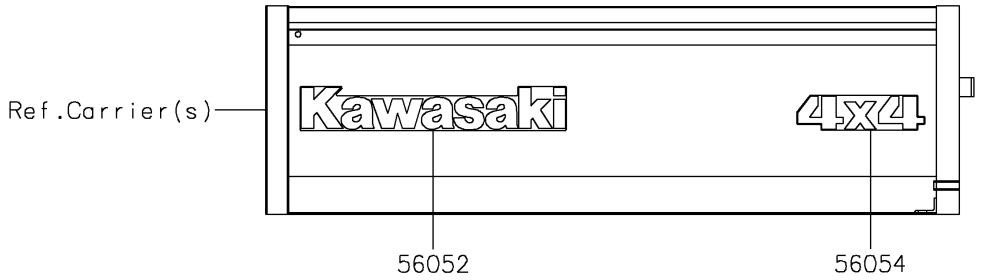

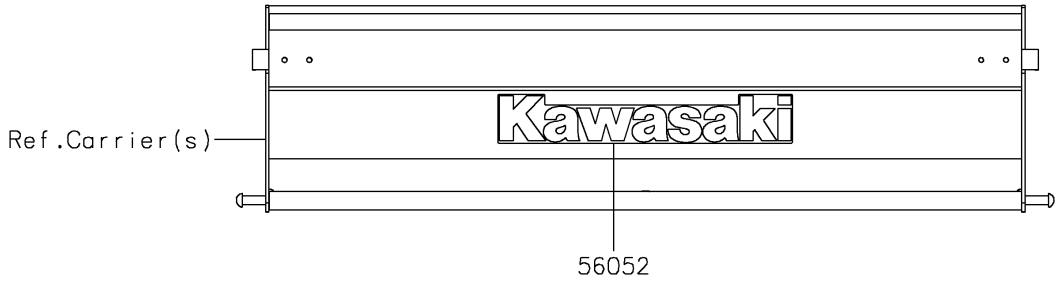

© 2026 Kawasaki Motors Corp., U.S.A.

2025 MULE SX™ 4x4

PARTS LIST

Decals

ITEM NAME	PART NUMBER	QUANTITY
MARK,KAWASAKI (Ref # 56052)	56052-1809	3
MARK,SIDE PLATE,4X4 (Ref # 56054)	56054-1809	2
MARK,FR FENDER,MULE SX (Ref # 56054A)	56054-2063	2
MARK,FR FENDER,FUEL INJECTION (Ref # 56054B)	56054-2459	2

© 2026 Kawasaki Motors Corp., U.S.A.