2025 BRUTE FORCE® 750 LE EPS CAMO

PARTS DIAGRAM

Meter(s)

F2530

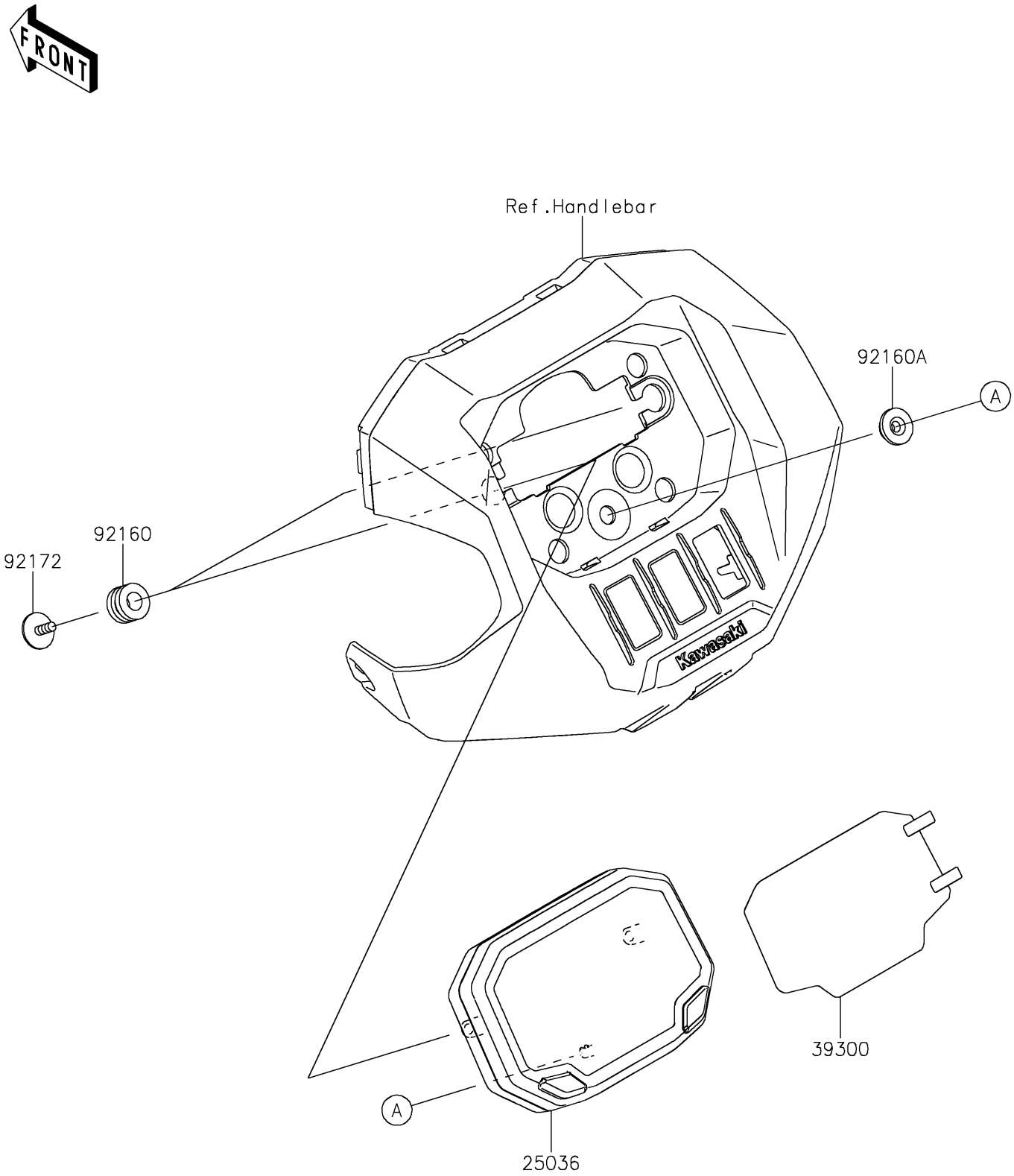

© 2026 Kawasaki Motors Corp., U.S.A.

2025 BRUTE FORCE® 750 LE EPS CAMO

Kawasaki
Let the Good Times Roll®

PARTS LIST

Meter(s)

ITEM NAME	PART NUMBER	QUANTITY
METER-ASSY,TFT DISPLAY (Ref # 25036)	25036-0095	1
FILM (Ref # 39300)	39300-0001	1
DAMPER,10X20X12 (Ref # 92160)	92160-1167	2
DAMPER (Ref # 92160A)	92160-1613	1
SCREW,CROSS,5X14 (Ref # 92172)	92172-1226	2

© 2026 Kawasaki Motors Corp., U.S.A.