2024 BRUTE FORCE® 750 LE EPS

PARTS DIAGRAM

Taillight(s)

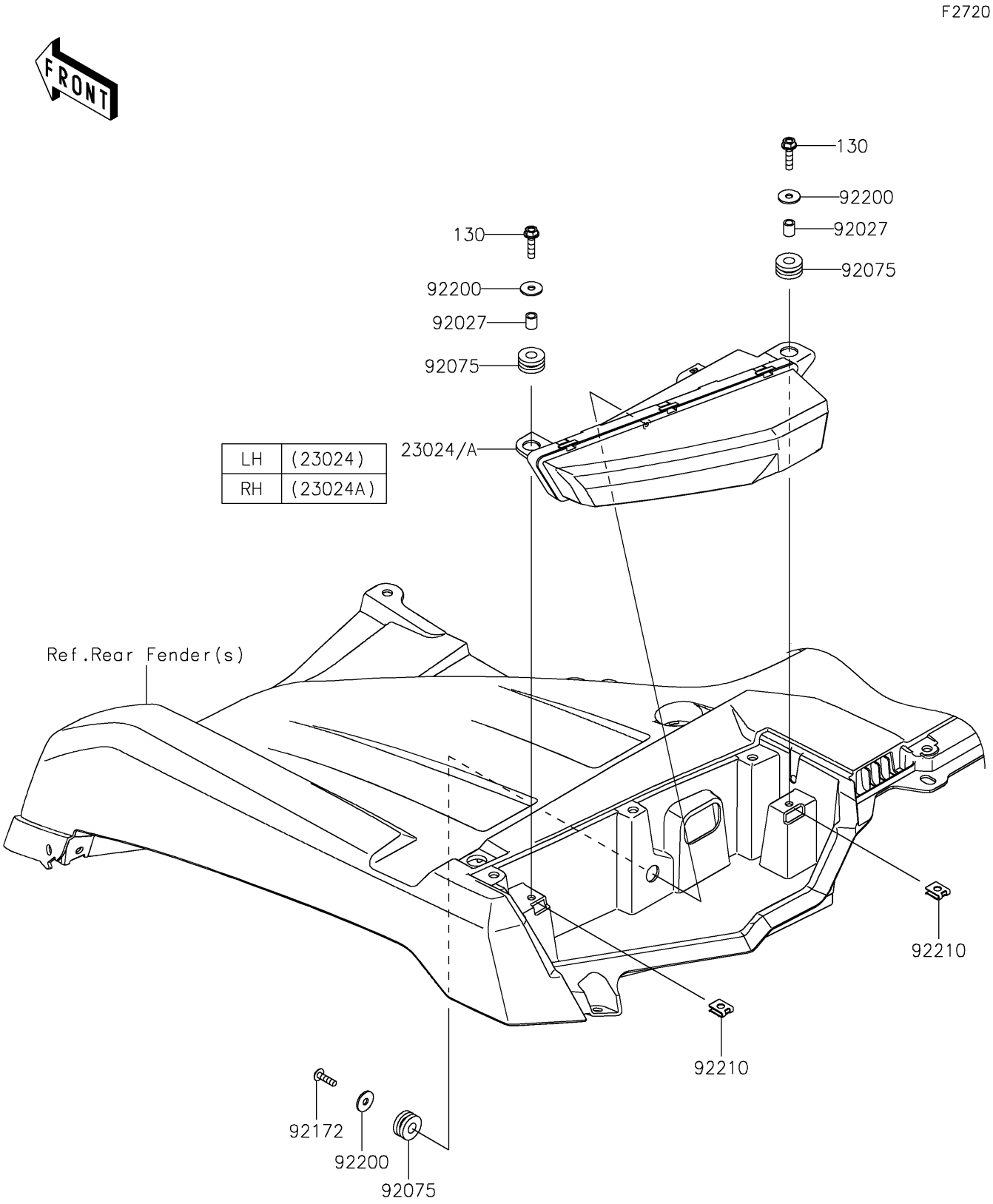

© 2026 Kawasaki Motors Corp., U.S.A.

2024 BRUTE FORCE® 750 LE EPS

PARTS LIST

Taillight(s)

ITEM NAME	PART NUMBER	QUANTITY
LAMP-ASSY-TAIL,LED,LH (Ref # 23024)	23024-0007	1
LAMP-ASSY-TAIL,LED,RH (Ref # 23024A)	23024-0008	1
COLLAR,6.8X10X12 (Ref # 92027)	92027-162	4
DAMPER,10X24X12 (Ref # 92075)	92075-1690	6
SCREW (Ref # 92172)	92172-1072	2
WASHER,6.5X20X1.6 (Ref # 92200)	92200-0283	6
NUT (Ref # 92210)	92210-0754	4
BOLT-FLANGED,6X25 (Ref # 130)	130BA0625	4

© 2026 Kawasaki Motors Corp., U.S.A.