2016 BRUTE FORCE® 750 4x4i

PARTS DIAGRAM

Seat

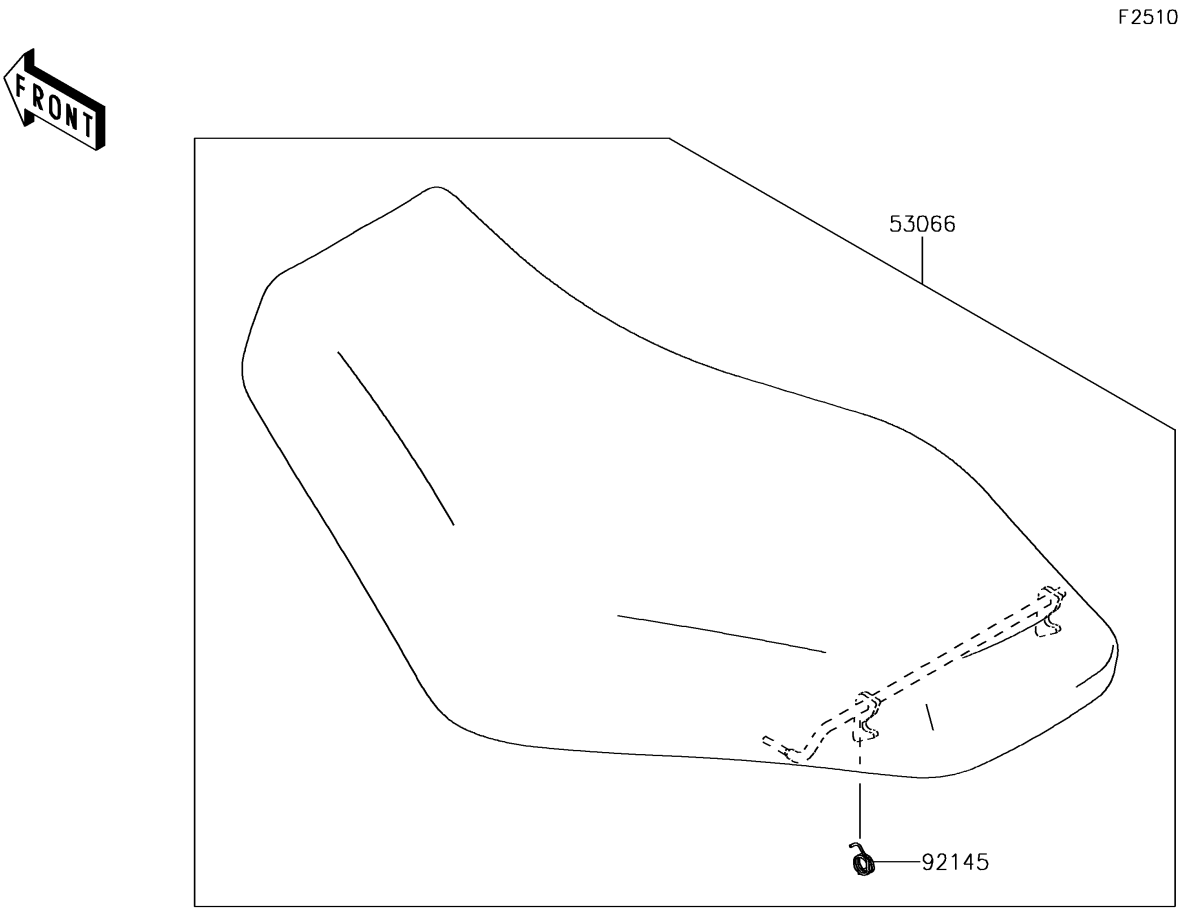

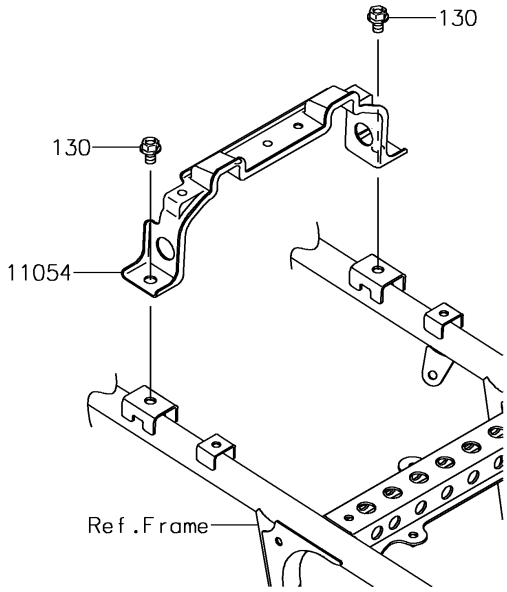

© 2026 Kawasaki Motors Corp., U.S.A.

2016 BRUTE FORCE® 750 4x4i

PARTS LIST

Seat

ITEM NAME	PART NUMBER	QUANTITY
BRACKET,SEAT&BATTERY BAND (Ref # 11054)	11054-1236	1
SEAT-ASSY,BLACK (Ref # 53066)	53066-0291-MA	1
SPRING,SEAT LATCH (Ref # 92145)	92145-0022	1
BOLT-FLANGED,8X12 (Ref # 130)	130BA0812	2

© 2026 Kawasaki Motors Corp., U.S.A.