2016 BRUTE FORCE® 750 4x4i

PARTS DIAGRAM

Engine Cover(s)

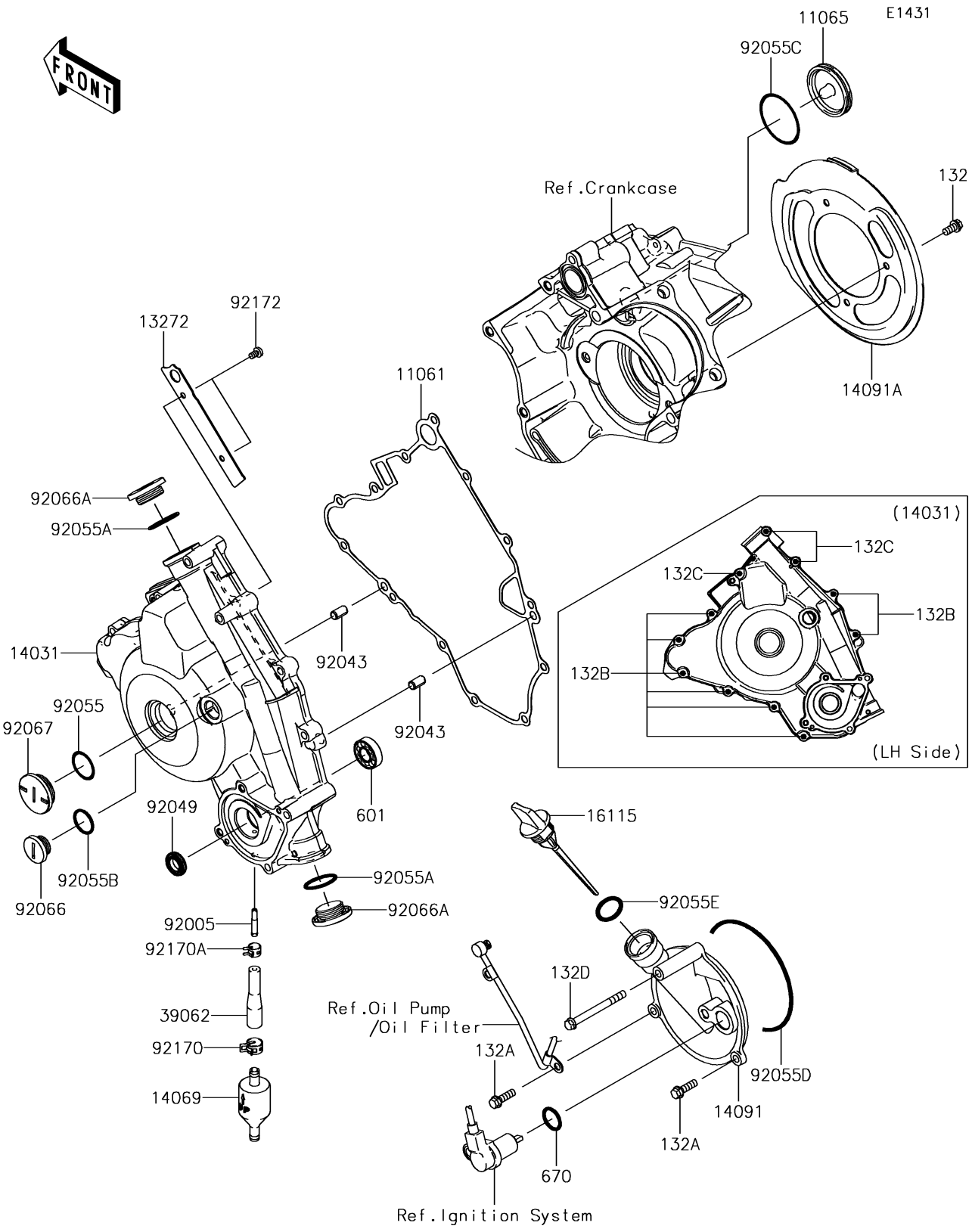

© 2026 Kawasaki Motors Corp., U.S.A.

2016 BRUTE FORCE® 750 4x4i

PARTS LIST

Engine Cover(s)

ITEM NAME	PART NUMBER	QUANTITY
GASKET (Ref # 11061)	11061-1119	1
CAP (Ref # 11065)	11065-1151	1
PLATE (Ref # 13272)	13272-1090	1
COVER-GENERATOR (Ref # 14031)	14031-0127	1
BREATHER (Ref # 14069)	14069-1051	1
COVER (Ref # 14091)	14091-1365	1
COVER,BELT CONVERTER (Ref # 14091A)	14091-1571	1
CAP-OIL FILLER (Ref # 16115)	16115-0001	1
HOSE-COOLING,CARBURETOR-VALVE (Ref # 39062)	39062-1382	1
FITTING (Ref # 92005)	92005-1264	1
PIN,6.2X8X14 (Ref # 92043)	92043-1263	2
SEAL-OIL,12X22X5 (Ref # 92049)	92049-0783	1
RING-O,27.7X2.4 (Ref # 92055)	92055-091	1
RING-O,25.7X2.4 (Ref # 92055A)	92055-1136	2
RING-O,20X2 (Ref # 92055B)	92055-1146	1
RING-O,44.7X2.4 (Ref # 92055C)	92055-1279	1
RING-O,99.5X2.0 (Ref # 92055D)	92055-1632	1
RING-O,20X3 (Ref # 92055E)	92055-2185	1
PLUG,COVER (Ref # 92066)	92066-0011	1
PLUG,25X8 (Ref # 92066A)	92066-0012	2
PLUG,30X8 (Ref # 92067)	92067-024	1
CLAMP (Ref # 92170)	92170-1492	1
CLAMP (Ref # 92170A)	92170-1493	1
SCREW,5X8 (Ref # 92172)	92172-0119	2
BOLT-FLANGED-SMALL,6X12 (Ref # 132)	132BA0612	3
BOLT-FLANGED-SMALL,6X20 (Ref # 132A)	132BA0620	2
BOLT-FLANGED-SMALL,6X30 (Ref # 132B)	132BA0630	8
BOLT-FLANGED-SMALL,6X55 (Ref # 132C)	132BA0655	3
BOLT-FLANGED-SMALL,6X65 (Ref # 132D)	132BA0665	1

© 2026 Kawasaki Motors Corp., U.S.A.

2016 BRUTE FORCE® 750 4x4i

PARTS LIST

Engine Cover(s)

ITEM NAME	PART NUMBER	QUANTITY
BEARING-BALL (Ref # 601)	601A6001	1
O RING,18MM (Ref # 670)	670D2018	1

© 2026 Kawasaki Motors Corp., U.S.A.