2018 BRUTE FORCE® 750 4x4i EPS

PARTS DIAGRAM

Owner's Tools

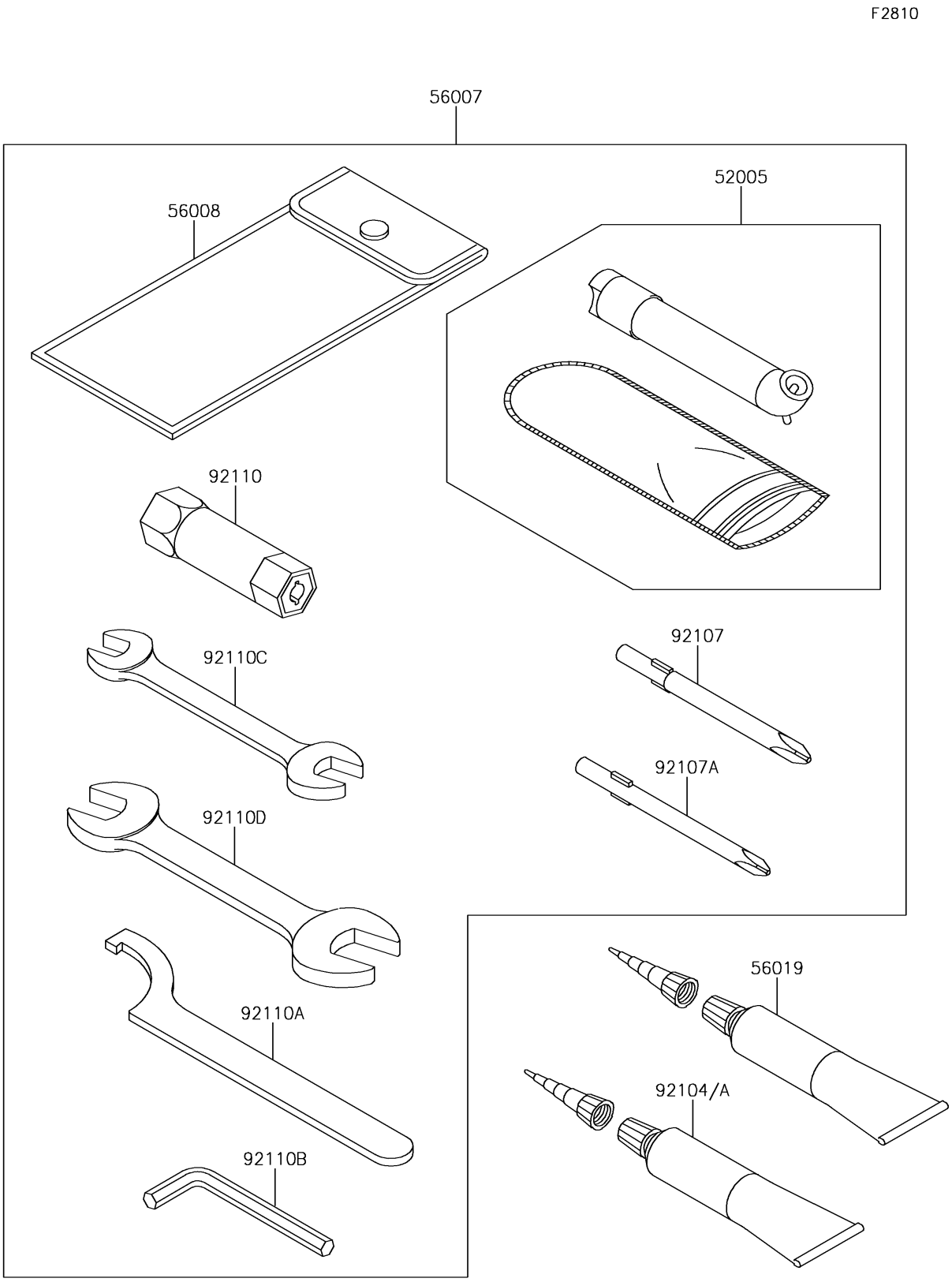

© 2026 Kawasaki Motors Corp., U.S.A.

2018 BRUTE FORCE® 750 4x4i EPS

PARTS LIST

Owner's Tools

ITEM NAME	PART NUMBER	QUANTITY

© 2026 Kawasaki Motors Corp., U.S.A.