2018 BRUTE FORCE® 750 4x4i EPS

PARTS DIAGRAM

Wheels/Tires(JJF/JKF)

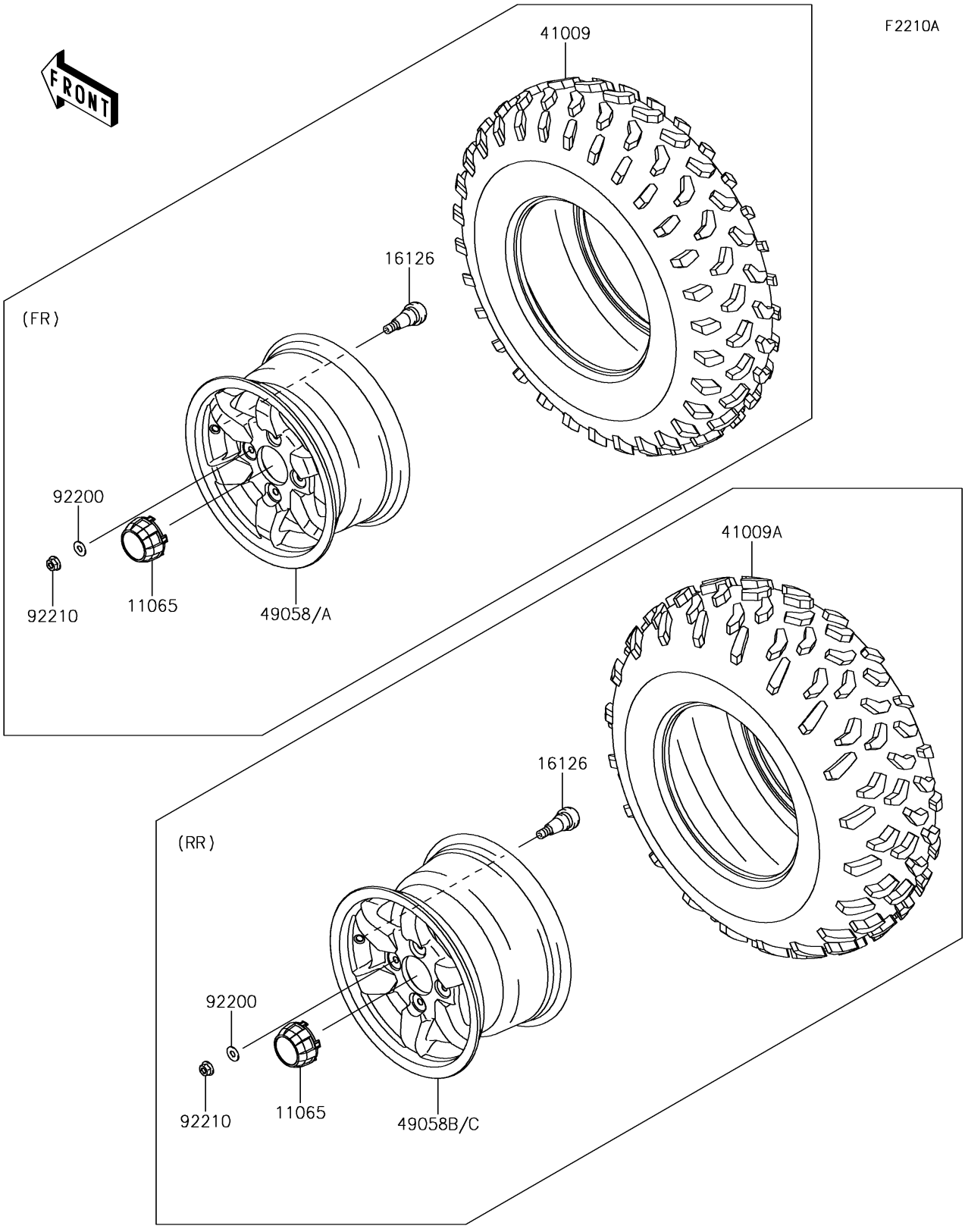

© 2026 Kawasaki Motors Corp., U.S.A.

2018 BRUTE FORCE® 750 4x4i EPS

PARTS LIST

Wheels/Tires(JJF/JKF)

ITEM NAME	PART NUMBER	QUANTITY
CAP,WHEEL,F.BLACK (Ref # 11065)	11065-0893-6Z	4
VALVE (Ref # 16126)	16126-4001	4
TIRE,FR,AT25X8-12 (Ref # 41009)	41009-0299	2
TIRE,RR,AT25X10-12 (Ref # 41009A)	41009-0300	2
WASHER,10.5X25X1.6 (Ref # 92200)	92200-1595	16
NUT,FLANGED,10MM (Ref # 92210)	92210-1325	16

© 2026 Kawasaki Motors Corp., U.S.A.