2025 MULE PRO-FX 1000 HD Edition

Kawasaki
Let the Good Times Roll®

PARTS DIAGRAM

Rear Bumper

F2910A

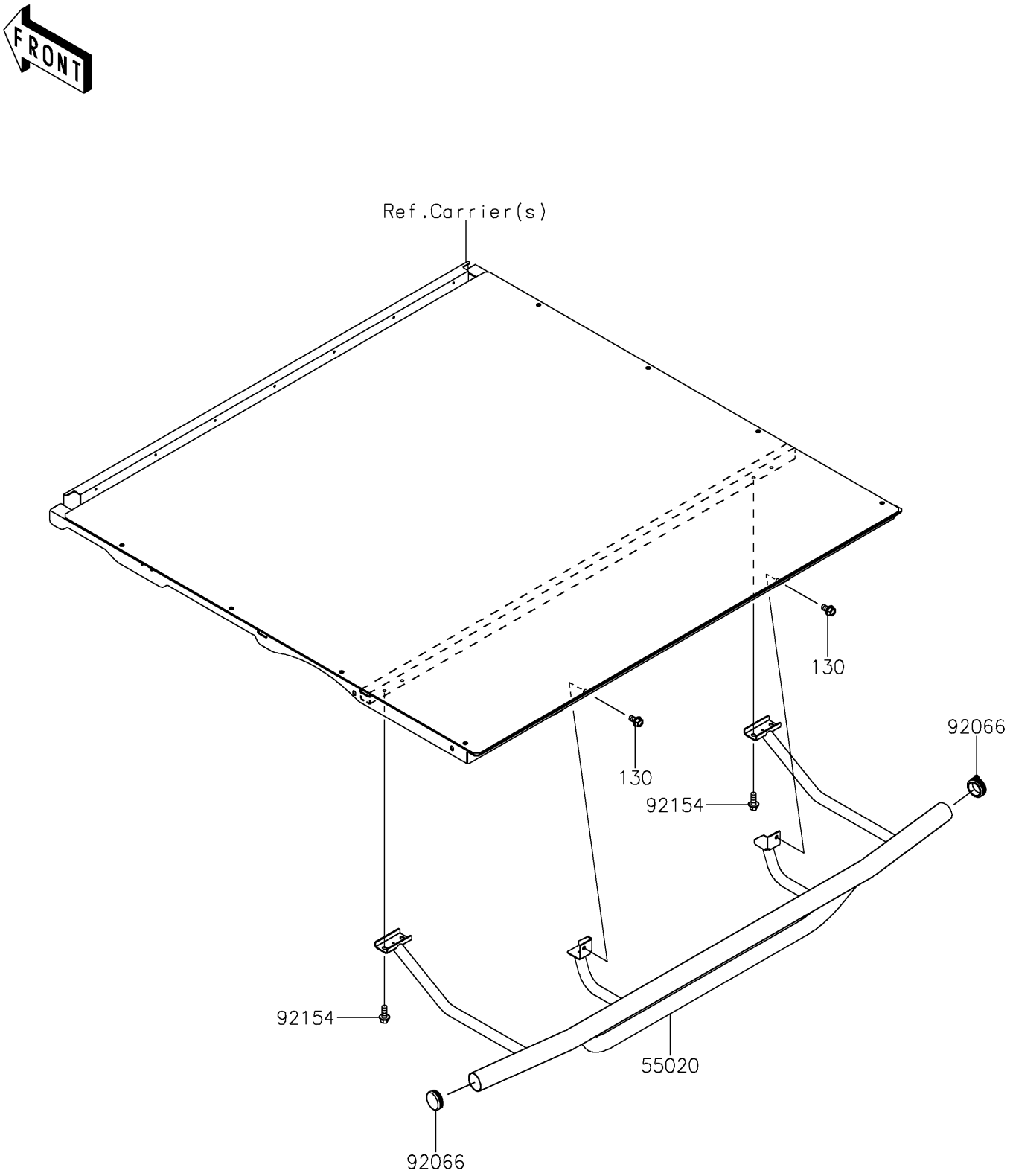

© 2026 Kawasaki Motors Corp., U.S.A.

2025 MULE PRO-FX 1000 HD Edition

Kawasaki
Let the Good Times Roll®

PARTS LIST

Rear Bumper

ITEM NAME	PART NUMBER	QUANTITY
GUARD (Ref # 55020)	55020-0941	1
PLUG (Ref # 92066)	92066-0769	2
BOLT,FLANGED,8X20 (Ref # 92154)	92154-1226	4
BOLT-FLANGED,8X14 (Ref # 130)	130BA0814	2

© 2026 Kawasaki Motors Corp., U.S.A.