2025 MULE PRO-FX 1000 HD Edition

PARTS DIAGRAM

Generator

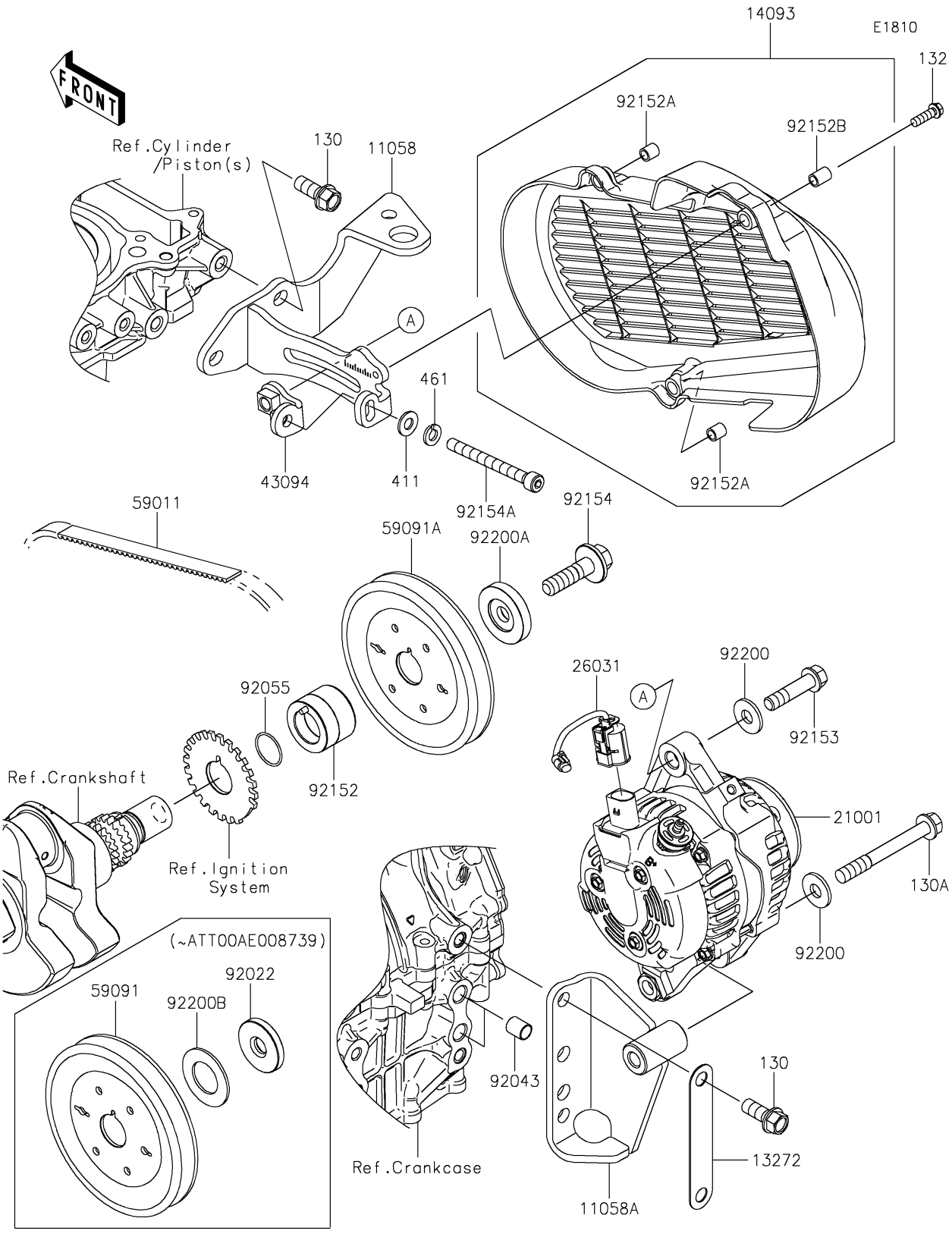

© 2026 Kawasaki Motors Corp., U.S.A.

2025 MULE PRO-FX 1000 HD Edition

PARTS LIST

Generator

ITEM NAME	PART NUMBER	QUANTITY
BRACKET,GENERATOR UPPER (Ref # 11058)	11058-0328	1
BRACKET,GENERATOR LOWER (Ref # 11058A)	11058-0329	1
PLATE,GENERATOR LOWER (Ref # 13272)	13272-4113	1
COVER,GENERATOR (Ref # 14093)	14093-1393	1
GENERATOR (Ref # 21001)	21001-0687	1
HARNESS,GENERATOR (Ref # 26031)	26031-4001	1
ADJUSTER,GENERATOR (Ref # 43094)	43094-0014	1
BELT (Ref # 59011)	59011-0059	1
PULLEY (Ref # 59091)	59091-0018	1
PULLEY (Ref # 59091A)	59091-0019	1
WASHER,12X40X6 (Ref # 92022)	92022-1904	1
PIN,10.1X12X14 (Ref # 92043)	92043-4009	2
RING-O,21.5X1.5 (Ref # 92055)	92055-1293	1
COLLAR,PULLEY (Ref # 92152)	92152-2928	1
COLLAR (Ref # 92152A)	92152-2948	2
COLLAR (Ref # 92152B)	92152-2949	1
BOLT,FLANGED,10X42 (Ref # 92153)	92153-1957	1
BOLT-FLANGED,12X43 (Ref # 92154)	92154-7017	1
BOLT-SOCKET,8X80 (Ref # 92154A)	92154-7077	1
WASHER,11X26X2.6 (Ref # 92200)	92200-0352	2
WASHER (Ref # 92200A)	92200-2621	1
WASHER (Ref # 92200B)	92200-2633	1
BOLT-FLANGED (Ref # 130)	130CA1025	4
BOLT-FLANGED,10X85 (Ref # 130A)	130CA1085	1
BOLT-FLANGED-SMALL,6X20 (Ref # 132)	132BA0620	3
WASHER-PLAIN,8MM (Ref # 411)	411AA0800	1
WASHER-SPRING,8MM (Ref # 461)	461DA0800	1

© 2026 Kawasaki Motors Corp., U.S.A.