2024 MULE PRO-FX™ 1000 HD Edition

Kawasaki
Let the Good Times Roll®

PARTS DIAGRAM

Fuel Pump

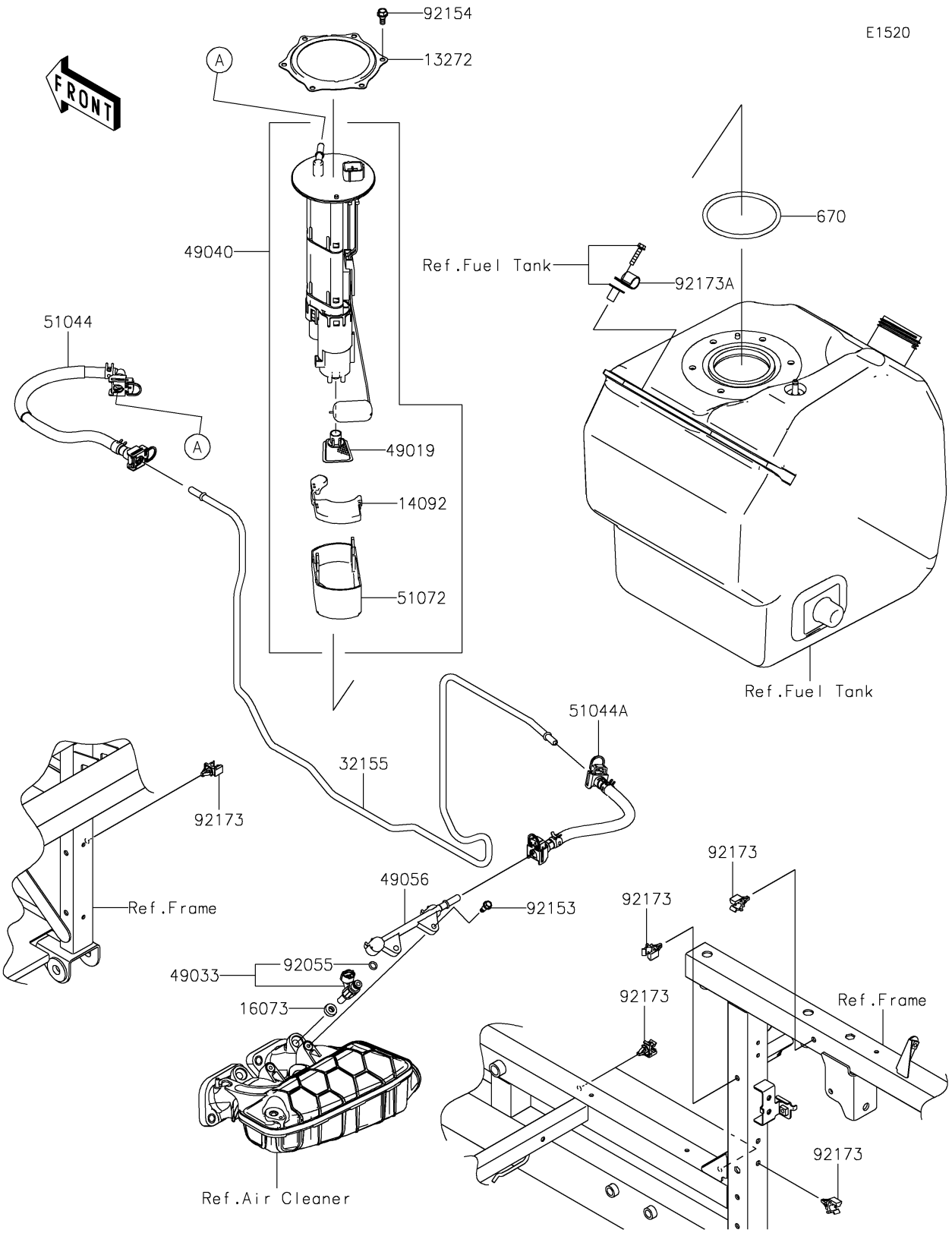

© 2026 Kawasaki Motors Corp., U.S.A.

2024 MULE PRO-FX™ 1000 HD Edition

Kawasaki
Let the Good Times Roll®

PARTS LIST

Fuel Pump

ITEM NAME	PART NUMBER	QUANTITY

© 2026 Kawasaki Motors Corp., U.S.A.