# 2021 MULE SX™ 4x4 XC LE FI

## PARTS DIAGRAM

### Headlight(s)

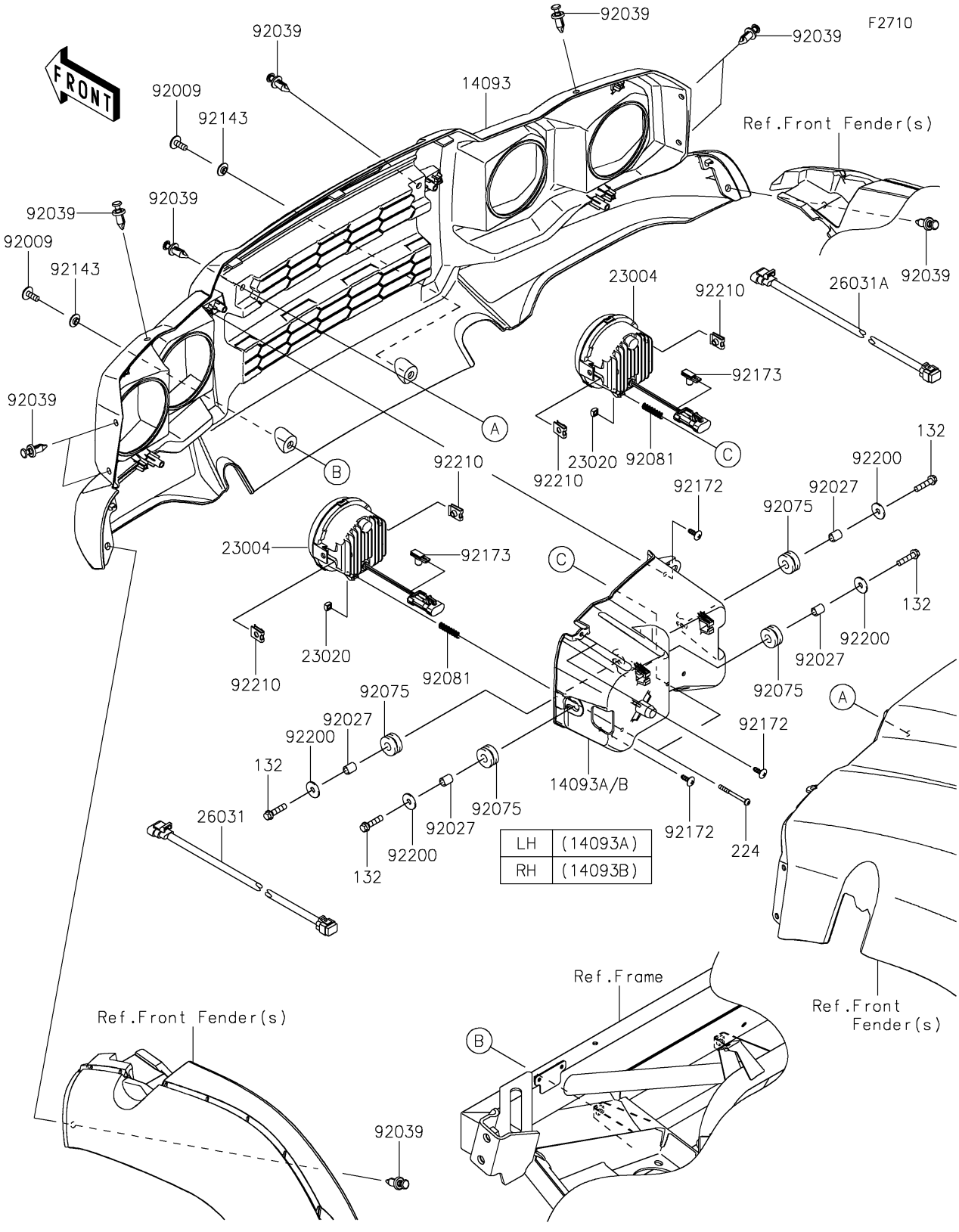


© 2026 Kawasaki Motors Corp., U.S.A.

# 2021 MULE SX™ 4x4 XC LE FI

## PARTS LIST

### Headlight(s)

| ITEM NAME | PART NUMBER | QUANTITY |
|---|---|---|
| COVER,FR GRILL (Ref # 14093) | 14093-0393 | 1 |
| COVER,HEAD LAMP,LH (Ref # 14093A) | 14093-0394 | 1 |
| COVER,HEAD LAMP,RH (Ref # 14093B) | 14093-0395 | 1 |
| LAMP-HEAD (Ref # 23004) | 23004-0372 | 4 |
| NUT,4MM,FOCUS ADJUST (Ref # 23020) | 23020-018 | 4 |
| HARNESS,HEAD LAMP,LH,2P (Ref # 26031) | 26031-2386 | 1 |
| HARNESS,HEAD LAMP,RH,2P (Ref # 26031A) | 26031-2387 | 1 |
| SCREW,6X16 (Ref # 92009) | 92009-1621 | 2 |
| COLLAR,6.8X10X12 (Ref # 92027) | 92027-162 | 8 |
| RIVET (Ref # 92039) | 92039-0776 | 10 |
| DAMPER,10X24X12 (Ref # 92075) | 92075-1690 | 8 |
| SPRING,FOCUS ADJUST (Ref # 92081) | 92081-1896 | 4 |
| COLLAR (Ref # 92143) | 92143-1087 | 2 |
| SCREW,TAPPING,5X14 (Ref # 92172) | 92172-0265 | 6 |
| CLAMP (Ref # 92173) | 92173-1491 | 4 |
| WASHER,6.5X20X1.6 (Ref # 92200) | 92200-0283 | 8 |
| NUT (Ref # 92210) | 92210-1125 | 8 |
| BOLT-FLANGED-SMALL,6X25 (Ref # 132) | 132BA0625 | 8 |
| SCREW-PAN-WP-CROS,4X45 (Ref # 224) | 224AA0445 | 4 |

© 2026 Kawasaki Motors Corp., U.S.A.