2022 MULE SX™ 4x4 XC FI

PARTS DIAGRAM

Decals(Red)(RNFNN/RPFNN)

F2861B

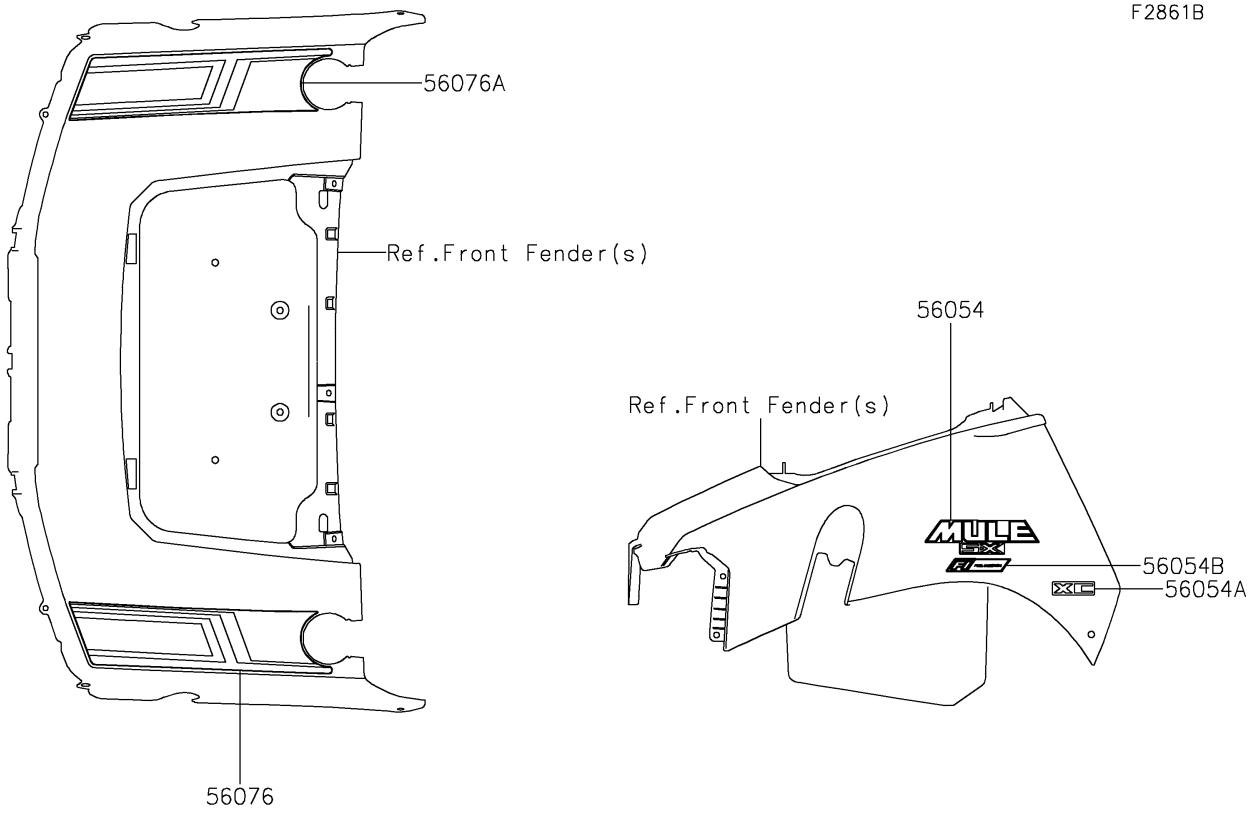

© 2026 Kawasaki Motors Corp., U.S.A.

2022 MULE SX™ 4x4 XC FI

PARTS LIST

Decals(Red)(RNFNN/RPFNN)

ITEM NAME	PART NUMBER	QUANTITY
MARK,KAWASAKI (Ref # 56052)	56052-1809	1
MARK,FR FENDER,MULE SX (Ref # 56054)	56054-2063	1
MARK,FR FENDER,XC (Ref # 56054A)	56054-2064	1
MARK,FR FENDER,FUEL INJECTION (Ref # 56054B)	56054-2459	1
PATTERN,FR FENDER,LH (Ref # 56076)	56076-2311	1
PATTERN,FR FENDER,RH (Ref # 56076A)	56076-2312	1
PATTERN,SIDE PLATE,LH (Ref # 56076B)	56076-2313	1
PATTERN,SIDE PLATE,RH (Ref # 56076C)	56076-2314	1

© 2026 Kawasaki Motors Corp., U.S.A.