2022 MULE SX™ 4x4 XC FI

PARTS DIAGRAM

Decals(Blue)(RMFNN)

F2861A

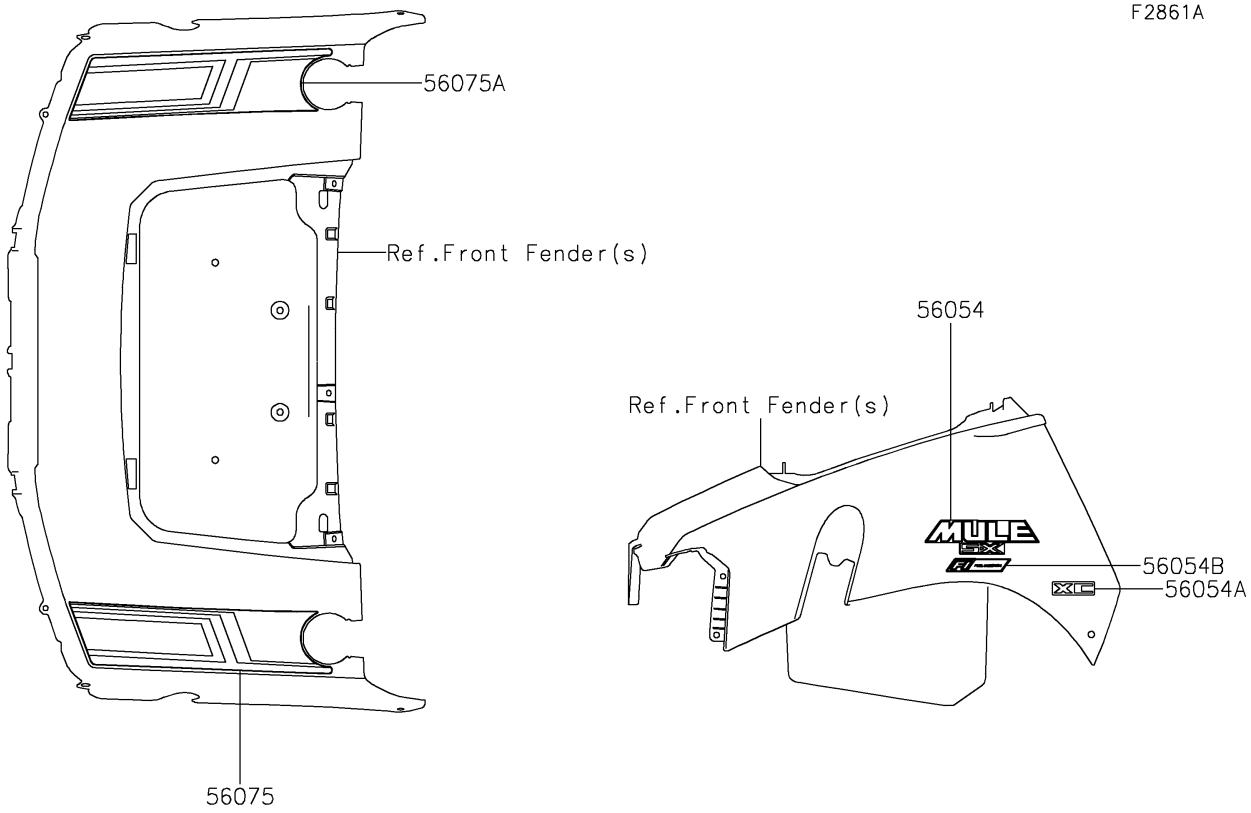

© 2026 Kawasaki Motors Corp., U.S.A.

2022 MULE SX™ 4x4 XC FI

PARTS LIST

Decals(Blue)(RMFNN)

ITEM NAME	PART NUMBER	QUANTITY
MARK,KAWASAKI (Ref # 56052)	56052-1809	1
MARK,FR FENDER,MULE SX (Ref # 56054)	56054-2063	2
MARK,FR FENDER,XC (Ref # 56054A)	56054-2064	2
MARK,FR FENDER,FUEL INJECTION (Ref # 56054B)	56054-2459	2
PATTERN,FR FENDER,LH (Ref # 56075)	56075-2763	1
PATTERN,FR FENDER,RH (Ref # 56075A)	56075-2764	1
PATTERN,SIDE PLATE,LH (Ref # 56075B)	56075-2765	1
PATTERN,SIDE PLATE,RH (Ref # 56075C)	56075-2766	1

© 2026 Kawasaki Motors Corp., U.S.A.