2022 MULE SX™ 4x4 XC FI

PARTS DIAGRAM

Starter Motor

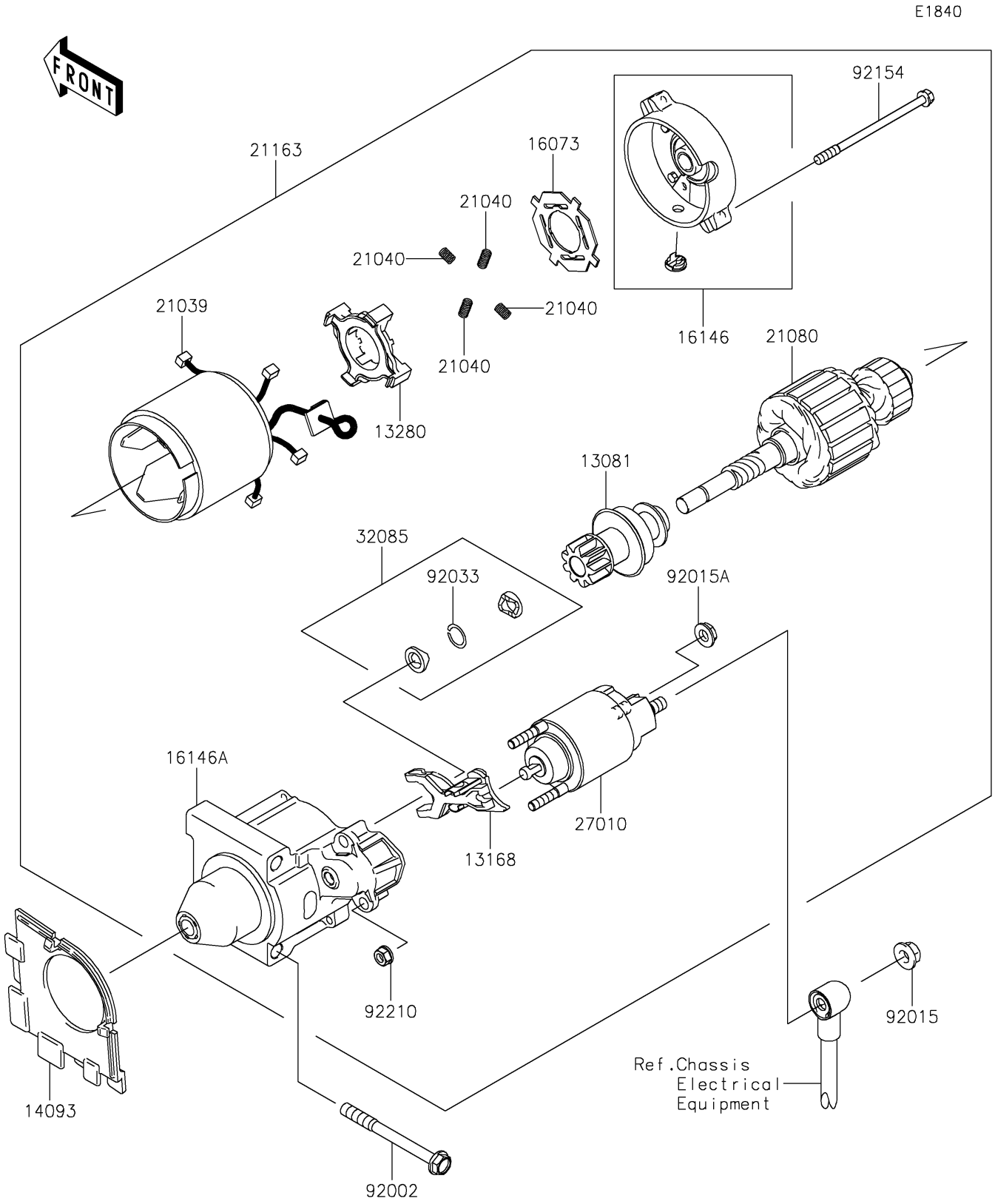

© 2026 Kawasaki Motors Corp., U.S.A.

2022 MULE SX™ 4x4 XC FI

PARTS LIST

Starter Motor

ITEM NAME	PART NUMBER	QUANTITY
CLUTCH-ASSY (Ref # 13081)	13081-0710	1
LEVER,PINION DRIVE (Ref # 13168)	13168-0847	1
HOLDER,BRUSH (Ref # 13280)	13280-0873	1
COVER (Ref # 14093)	14093-0932	1
INSULATOR (Ref # 16073)	16073-0854	1
COVER-ASSY (Ref # 16146)	16146-0886	1
COVER-ASSY (Ref # 16146A)	16146-0887	1
BRUSH,STARTER-ELECTRIC (Ref # 21039)	21039-0011	4
SPRING-BRUSH (Ref # 21040)	21040-0005	4
ARMATURE,STARTER-ELECTRIC (Ref # 21080)	21080-0011	1
STARTER-ELECTRIC (Ref # 21163)	21163-0801	1
SWITCH,MAGNET (Ref # 27010)	27010-0843	1
STOPPER,PINION (Ref # 32085)	32085-0797	1
BOLT,8X83 (Ref # 92002)	92002-1794	2
NUT,FLANGED,8MM (Ref # 92015)	92015-1406	1
NUT (Ref # 92015A)	92015-2147	1
RING-SNAP (Ref # 92033)	92033-0777	1
BOLT (Ref # 92154)	92154-2116	2
NUT (Ref # 92210)	92210-1493	2

© 2026 Kawasaki Motors Corp., U.S.A.