2022 MULE SX™ 4x4 FI

PARTS DIAGRAM

Reflectors

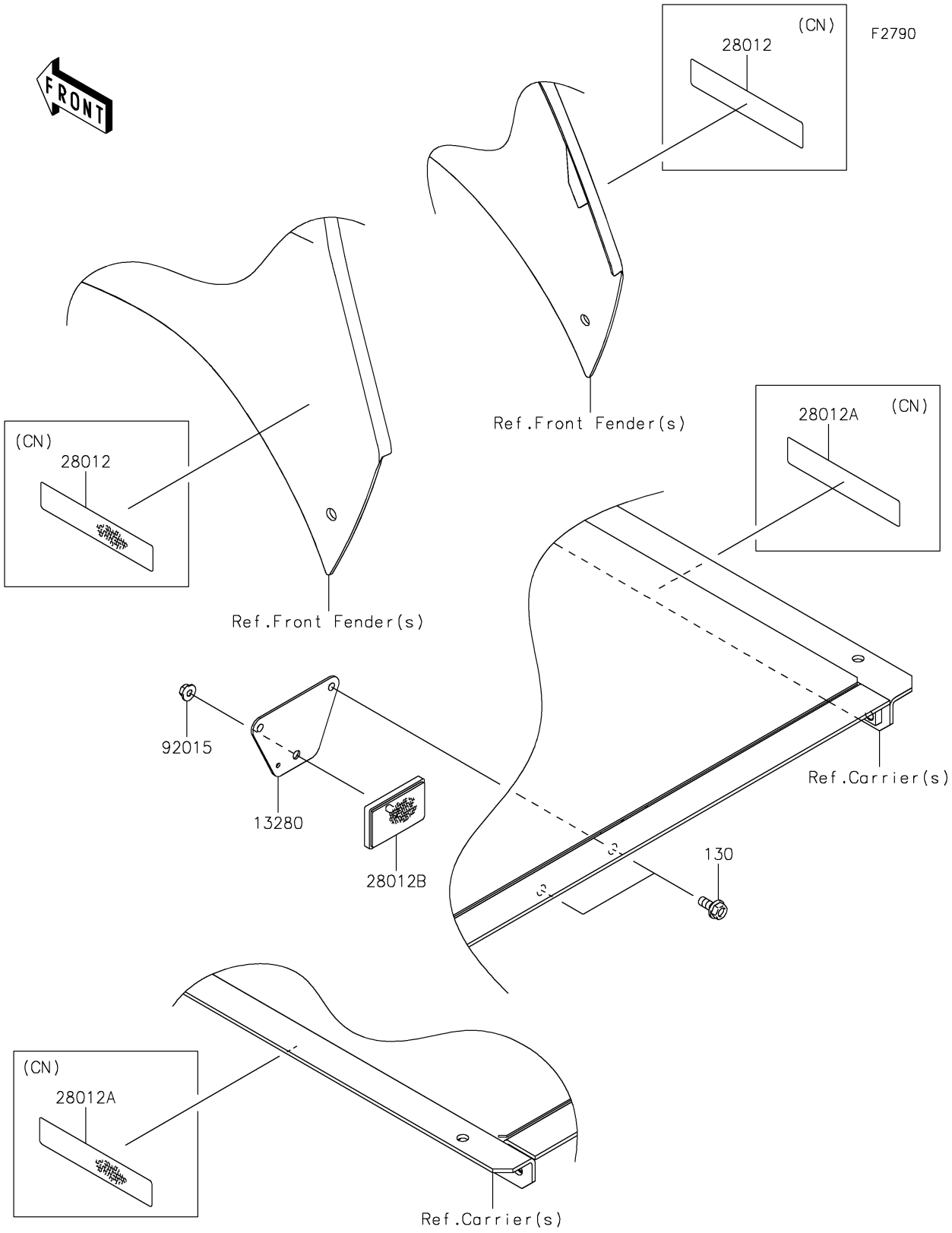

© 2026 Kawasaki Motors Corp., U.S.A.

2022 MULE SX™ 4x4 FI

PARTS LIST

Reflectors

ITEM NAME	PART NUMBER	QUANTITY

© 2026 Kawasaki Motors Corp., U.S.A.