2020 MULE SX™ 4x4 SE FI

PARTS DIAGRAM

Cylinder Head

E1111

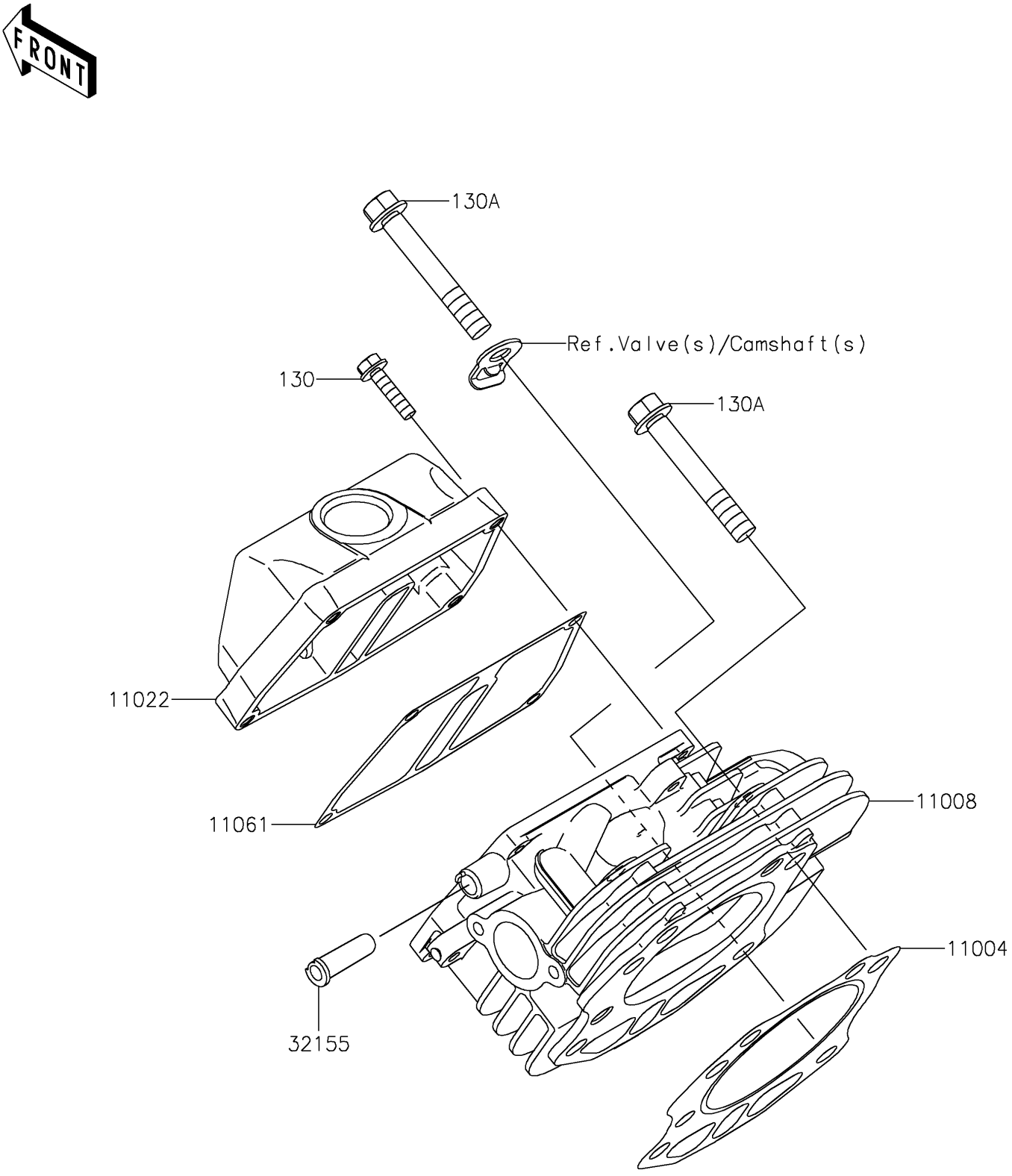

© 2026 Kawasaki Motors Corp., U.S.A.

2020 MULE SX™ 4x4 SE FI

PARTS LIST

Cylinder Head

ITEM NAME	PART NUMBER	QUANTITY
GASKET-HEAD (Ref # 11004)	11004-7017	1
HEAD-COMP-CYLINDER (Ref # 11008)	11008-2162	1
CASE-ROCKER (Ref # 11022)	11022-0045	1
GASKET,CASE-ROCKER (Ref # 11061)	11061-1325	1
PIPE,HEAD-CYLINDER (Ref # 32155)	32155-2213	1
BOLT-FLANGED,6X25 (Ref # 130)	130BA0625	4
BOLT-FLANGED,10X65 (Ref # 130A)	130CA1065	4

© 2026 Kawasaki Motors Corp., U.S.A.