2020 MULE SX™ 4x4 XC LE FI

PARTS DIAGRAM

Fuel Pump

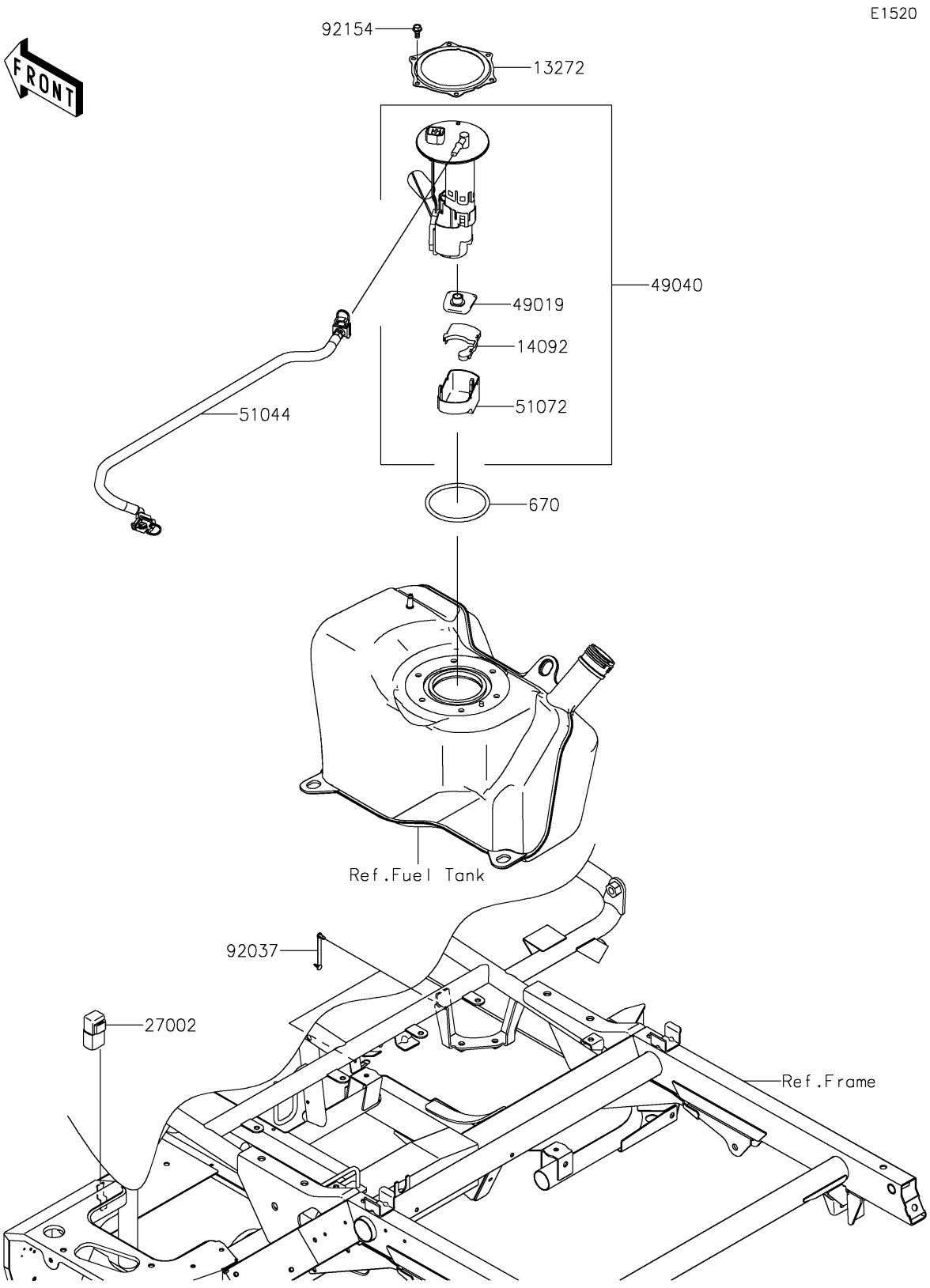

© 2026 Kawasaki Motors Corp., U.S.A.

2020 MULE SX™ 4x4 XC LE FI

PARTS LIST

Fuel Pump

ITEM NAME	PART NUMBER	QUANTITY
PLATE (Ref # 13272)	13272-2501	1
COVER (Ref # 14092)	14092-1044	1
RELAY-ASSY (Ref # 27002)	27002-1088	1
FILTER-FUEL (Ref # 49019)	49019-0013	1
PUMP-FUEL (Ref # 49040)	49040-0718	1
TUBE-ASSY (Ref # 51044)	51044-0928	1
CHAMBER-FUEL (Ref # 51072)	51072-0003	1
CLAMP,SPEED,L=58 (Ref # 92037)	92037-1163	2
BOLT,FUEL PUMP (Ref # 92154)	92154-1326	6
O RING (Ref # 670)	670E5090	1

© 2026 Kawasaki Motors Corp., U.S.A.