2020 MULE SX™ 4x4 XC CAMO FI

PARTS DIAGRAM

Shift Lever(s)

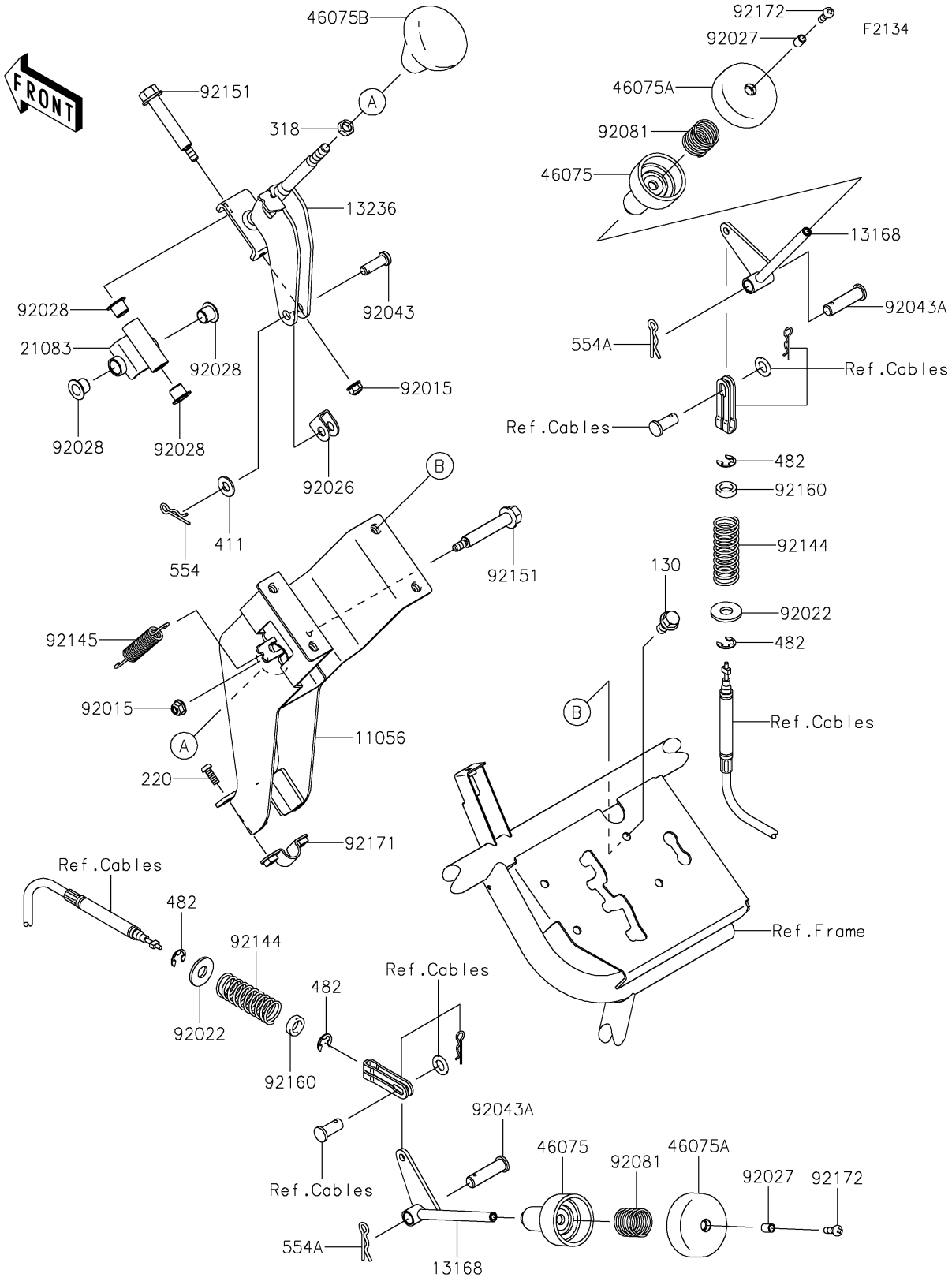

© 2026 Kawasaki Motors Corp., U.S.A.

2020 MULE SX™ 4x4 XC CAMO FI

PARTS LIST

Shift Lever(s)

ITEM NAME	PART NUMBER	QUANTITY
BRACKET,SHIFT LEVER (Ref # 11056)	11056-2237	1
LEVER (Ref # 13168)	13168-0069	2
LEVER-COMP,SHIFT (Ref # 13236)	13236-0073	1
ARM (Ref # 21083)	21083-0023	1
GRIP (Ref # 46075)	46075-0012	2
GRIP (Ref # 46075A)	46075-0014	2
GRIP,SHIFT (Ref # 46075B)	46075-0046	1
NUT,LOCK,FLANGED,6MM (Ref # 92015)	92015-1675	2
WASHER,10.5X26X2.3 (Ref # 92022)	92022-044	2
SPACER (Ref # 92026)	92026-0074	1
COLLAR,5X7X9.3 (Ref # 92027)	92027-1313	2
BUSHING (Ref # 92028)	92028-1507	4
PIN (Ref # 92043)	92043-0053	1
PIN,10X34 (Ref # 92043A)	92043-1069	2
SPRING (Ref # 92081)	92081-1714	2
SPRING (Ref # 92144)	92144-1510	2
SPRING (Ref # 92145)	92145-0249	1
BOLT,6MM (Ref # 92151)	92151-1747	2
DAMPER (Ref # 92160)	92160-3754	2
CLAMP (Ref # 92171)	92171-0365	1
SCREW (Ref # 92172)	92172-7501	2
BOLT-FLANGED,8X16 (Ref # 130)	130BA0816	4
SCREW-PAN-CROS,5X14 (Ref # 220)	220AA0514	2
NUT-HEX-SMALL (Ref # 318)	318BB0800	1
WASHER-PLAIN,8MM (Ref # 411)	411AA0800	1
CIRCLIP-TYPE-E,8MM (Ref # 482)	482EA8000	4
PIN-SNAP (Ref # 554)	554DA0800	1
PIN-SNAP,10MM (Ref # 554A)	554DA1000	2

© 2026 Kawasaki Motors Corp., U.S.A.