2019 MULE SX™ 4x4 XC CAMO FI

PARTS DIAGRAM

Rear Axle

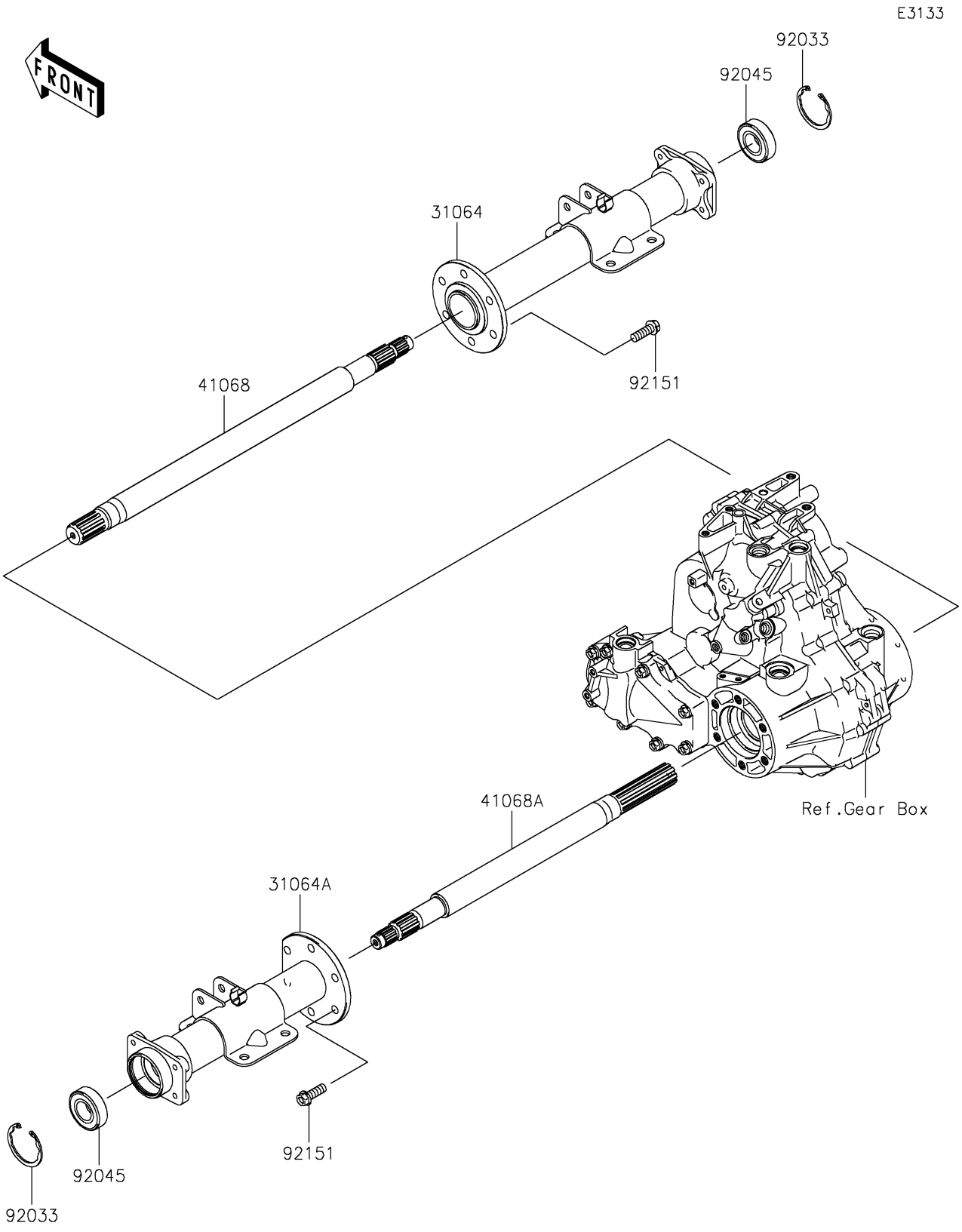

© 2026 Kawasaki Motors Corp., U.S.A.

2019 MULE SX™ 4x4 XC CAMO FI

PARTS LIST

Rear Axle

ITEM NAME	PART NUMBER	QUANTITY
PIPE-COMP,RH (Ref # 31064)	31064-0709	1
PIPE-COMP,LH (Ref # 31064A)	31064-0710	1
AXLE,RH (Ref # 41068)	41068-0036	1
AXLE,LH (Ref # 41068A)	41068-0037	1
RING-SNAP (Ref # 92033)	92033-2149	2
BEARING-BALL,6205A26DDU2 (Ref # 92045)	92045-0044	2
BOLT,10X28 (Ref # 92151)	92151-2142	12

© 2026 Kawasaki Motors Corp., U.S.A.