2019 MULE SX™ 4x4 XC FI

PARTS DIAGRAM

Chassis Electrical Equipment

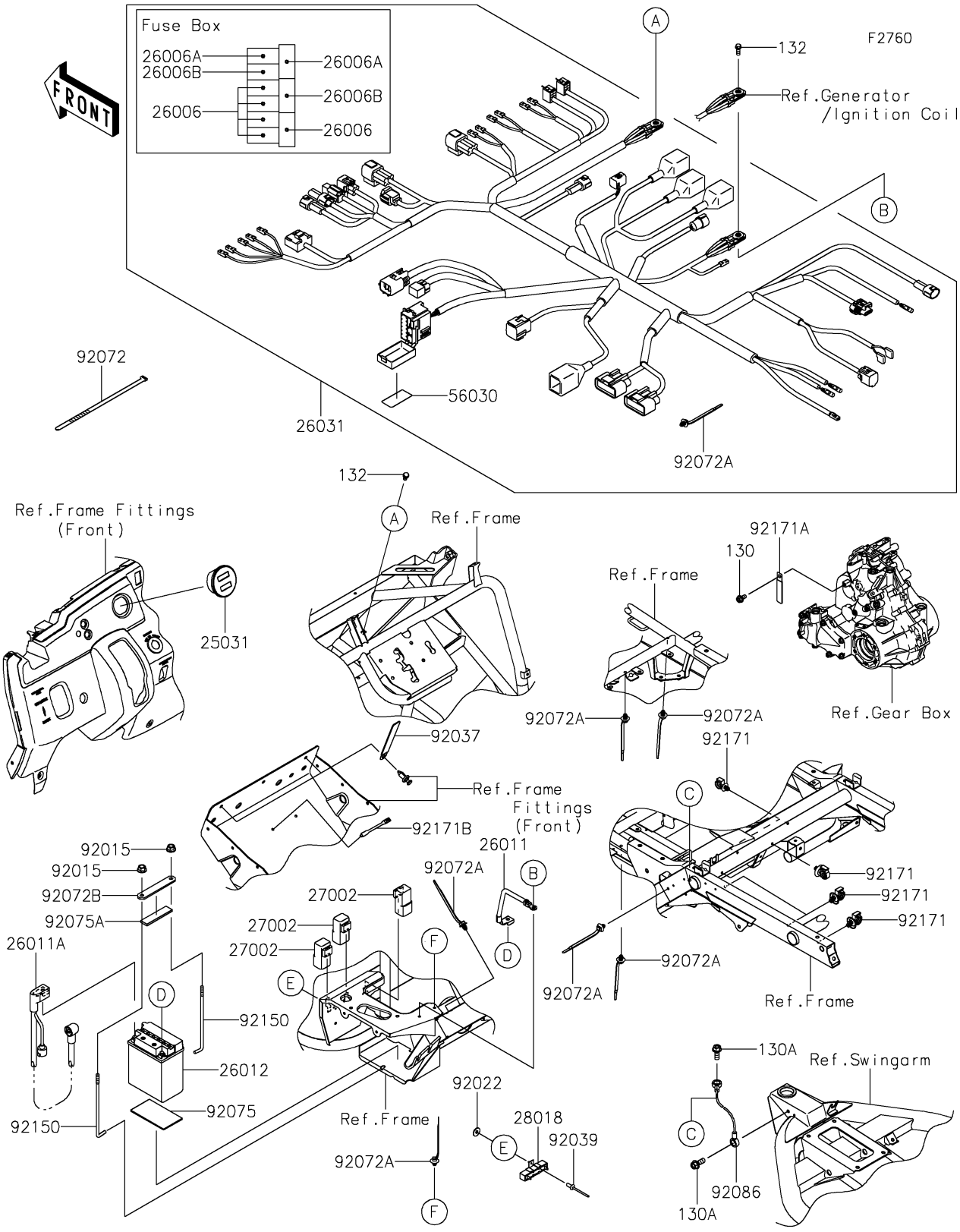

© 2026 Kawasaki Motors Corp., U.S.A.

2019 MULE SX™ 4x4 XC FI

PARTS LIST

Chassis Electrical Equipment

ITEM NAME	PART NUMBER	QUANTITY
METER-ASSY (Ref # 25031)	25031-0829	1
FUSE,MINI BLADE,10A,RED (Ref # 26006)	26006-0009	5
FUSE,MINI BLADE,30A,GREEN (Ref # 26006A)	26006-1080	2
FUSE,MINI BLADE,20A,YELLOW (Ref # 26006B)	26006-3704	2
WIRE-LEAD,BATTERY(-) (Ref # 26011)	26011-0923	1
WIRE-LEAD,BATTERY(+) (Ref # 26011A)	26011-0924	1
BATTERY,YB14A-A2,12V 14AH (Ref # 26012)	26012-1446	1
HARNESS,MAIN (Ref # 26031)	26031-2413	1
RELAY-ASSY (Ref # 27002)	27002-1088	3
RESISTOR (Ref # 28018)	28018-0005	1
LABEL,FUSE BOX (Ref # 56030)	56030-1361	1
NUT,FLANGED,8MM (Ref # 92015)	92015-1406	2
WASHER,4.3X12.5X1 (Ref # 92022)	92022-1949	1
CLAMP,HARNESS,L=100 (Ref # 92037)	92037-1636	2
RIVET,BLIND,4.0X9.2 (Ref # 92039)	92039-1163	1
BAND,L=188 (Ref # 92072)	92072-1239	7
BAND,OS170-FT7(BLACK) (Ref # 92072A)	92072-1414	9
BAND,BATTERY (Ref # 92072B)	92072-7507	1
DAMPER (Ref # 92075)	92075-1076	1
DAMPER (Ref # 92075A)	92075-1214	1
WIRE (Ref # 92086)	92086-1054	1
BOLT,BATTERY (Ref # 92150)	92150-1293	2
CLAMP (Ref # 92171)	92171-0453	7
CLAMP,L=60 (Ref # 92171A)	92171-0652	1
CLAMP (Ref # 92171B)	92171-1365	1
BOLT-FLANGED,6X12 (Ref # 130)	130AA0612	1
BOLT-FLANGED,8X20 (Ref # 130A)	130BA0820	2
BOLT-FLANGED-SMALL,6X16 (Ref # 132)	132BA0616	2

© 2026 Kawasaki Motors Corp., U.S.A.