2019 MULE SX™ 4x4 XC FI

PARTS DIAGRAM

Guards/Cab Frame

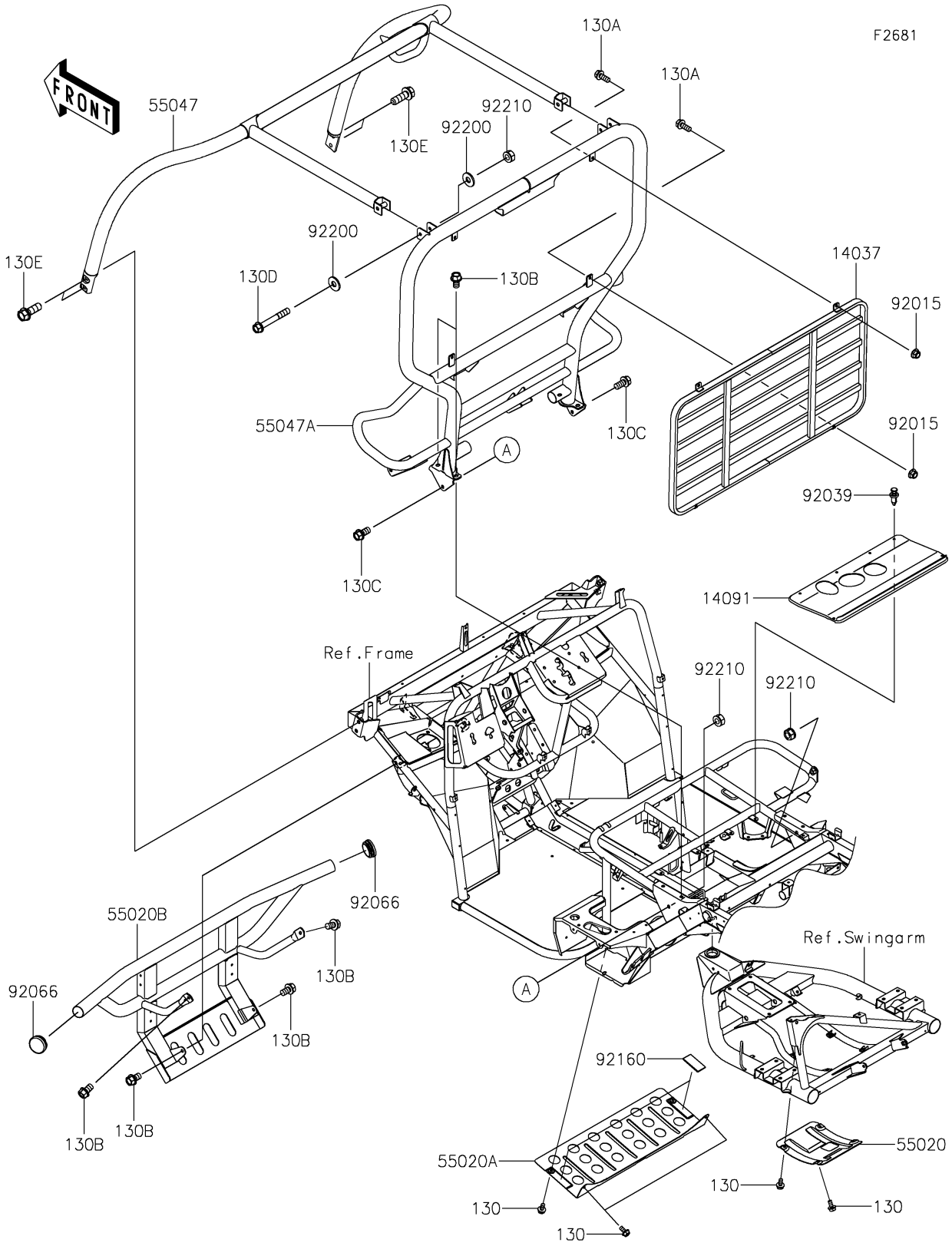

© 2026 Kawasaki Motors Corp., U.S.A.

2019 MULE SX™ 4x4 XC FI

PARTS LIST

Guards/Cab Frame

ITEM NAME	PART NUMBER	QUANTITY
SCREEN,T.BLACK (Ref # 14037)	14037-0774-388	1
COVER (Ref # 14091)	14091-0355	1
GUARD,DIFF (Ref # 55020)	55020-0141	1
GUARD (Ref # 55020A)	55020-0883	1
GUARD,FR,T.BLACK (Ref # 55020B)	55020-1933-388	1
BAR-COMP,FR,T.BLACK (Ref # 55047)	55047-0376-388	1
BAR-COMP,RR,T.BLACK (Ref # 55047A)	55047-0377-388	1
NUT,FLANGED,LOCK,8MM (Ref # 92015)	92015-1668	4
RIVET (Ref # 92039)	92039-0776	6
PLUG,42MM (Ref # 92066)	92066-0830	2
DAMPER (Ref # 92160)	92160-1102	2
WASHER,11X26X2.6 (Ref # 92200)	92200-0352	4
NUT,LOCK,10MM (Ref # 92210)	92210-1204	4
BOLT-FLANGED,6X12 (Ref # 130)	130BA0612	8
BOLT-FLANGED,8X20 (Ref # 130A)	130BA0820	4
BOLT-FLANGED,10X16 (Ref # 130B)	130BA1016	8
BOLT-FLANGED,10X20 (Ref # 130C)	130BA1020	2
BOLT-FLANGED,10X70 (Ref # 130D)	130BA1070	2
BOLT-FLANGED,12X35 (Ref # 130E)	130BA1235	4

© 2026 Kawasaki Motors Corp., U.S.A.