2019 MULE SX™ 4x4 XC FI

PARTS DIAGRAM

Wheels/Tires

F2210

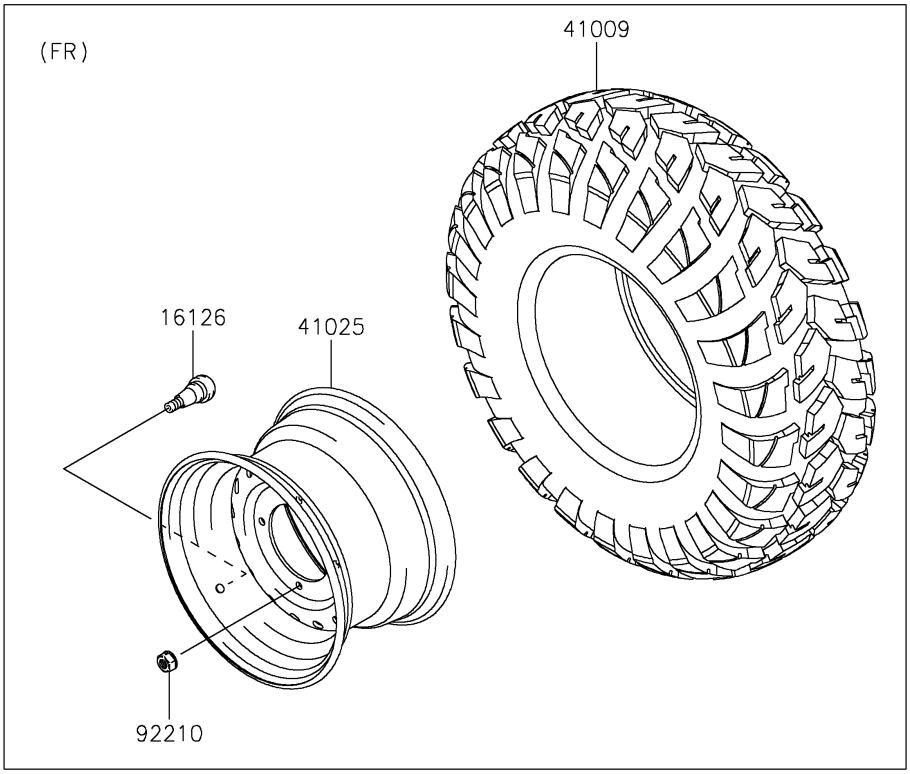

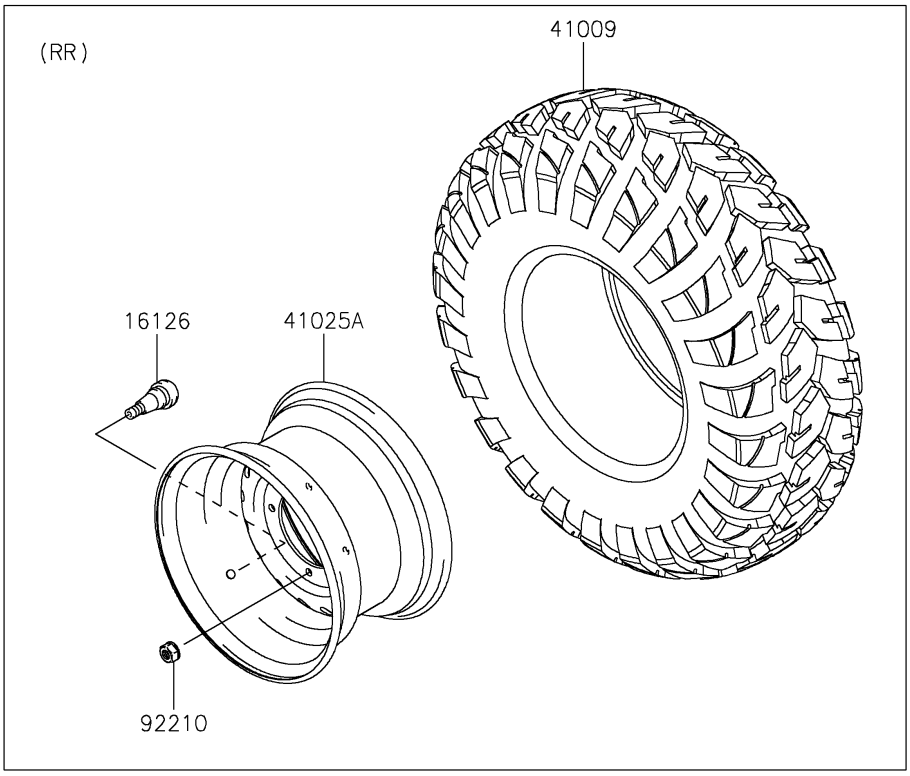

© 2026 Kawasaki Motors Corp., U.S.A.

2019 MULE SX™ 4x4 XC FI

PARTS LIST

Wheels/Tires

ITEM NAME	PART NUMBER	QUANTITY
VALVE (Ref # 16126)	16126-4001	4
TIRE,26X9.00R12 4PR,FRONTIER (Ref # 41009)	41009-0696	4
RIM,FR,12X7.5AT,F.S.BLACK (Ref # 41025)	41025-7505-397	2
RIM,RR,12X7.5AT,F.S.BLACK (Ref # 41025A)	41025-7506-397	2
NUT,LOCK,10MM (Ref # 92210)	92210-1204	16

© 2026 Kawasaki Motors Corp., U.S.A.