2019 MULE SX™ 4x4 XC FI

PARTS DIAGRAM

Wheels/Tires

F2210

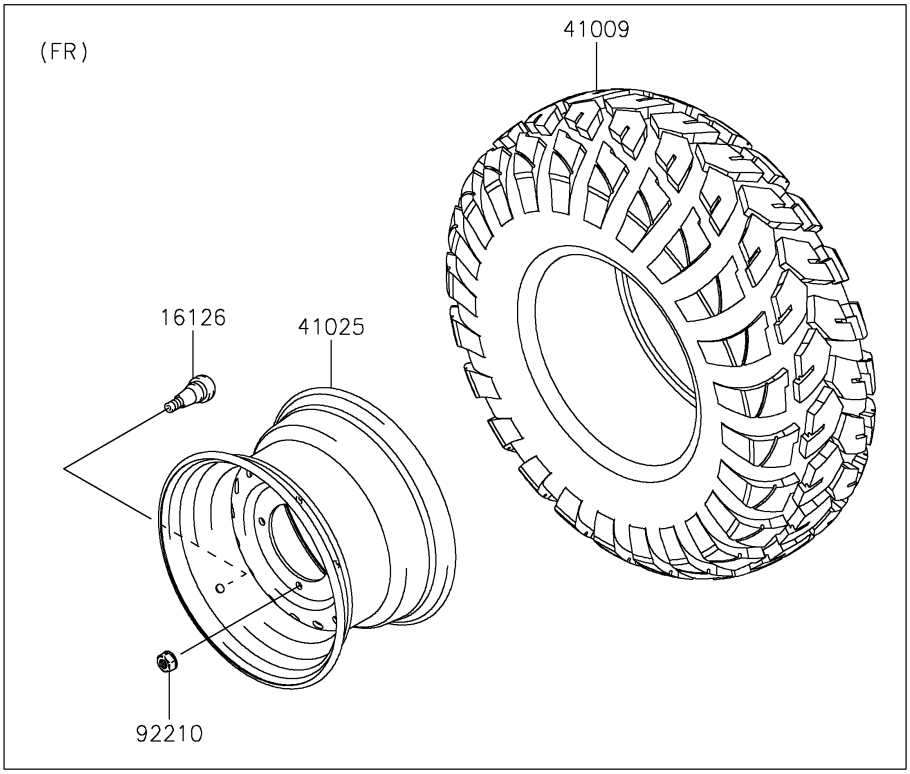

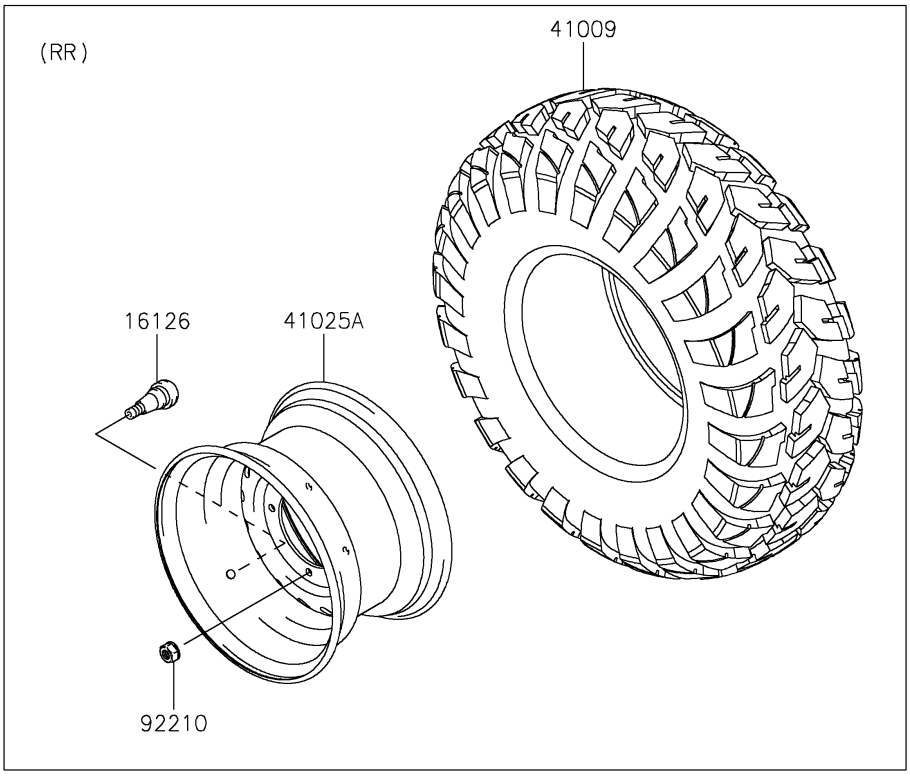

© 2026 Kawasaki Motors Corp., U.S.A.

2019 MULE SX™ 4x4 XC FI

PARTS LIST

Wheels/Tires

ITEM NAME	PART NUMBER	QUANTITY

© 2026 Kawasaki Motors Corp., U.S.A.