2019 MULE SX™ 4x4 XC FI

PARTS DIAGRAM

Suspension

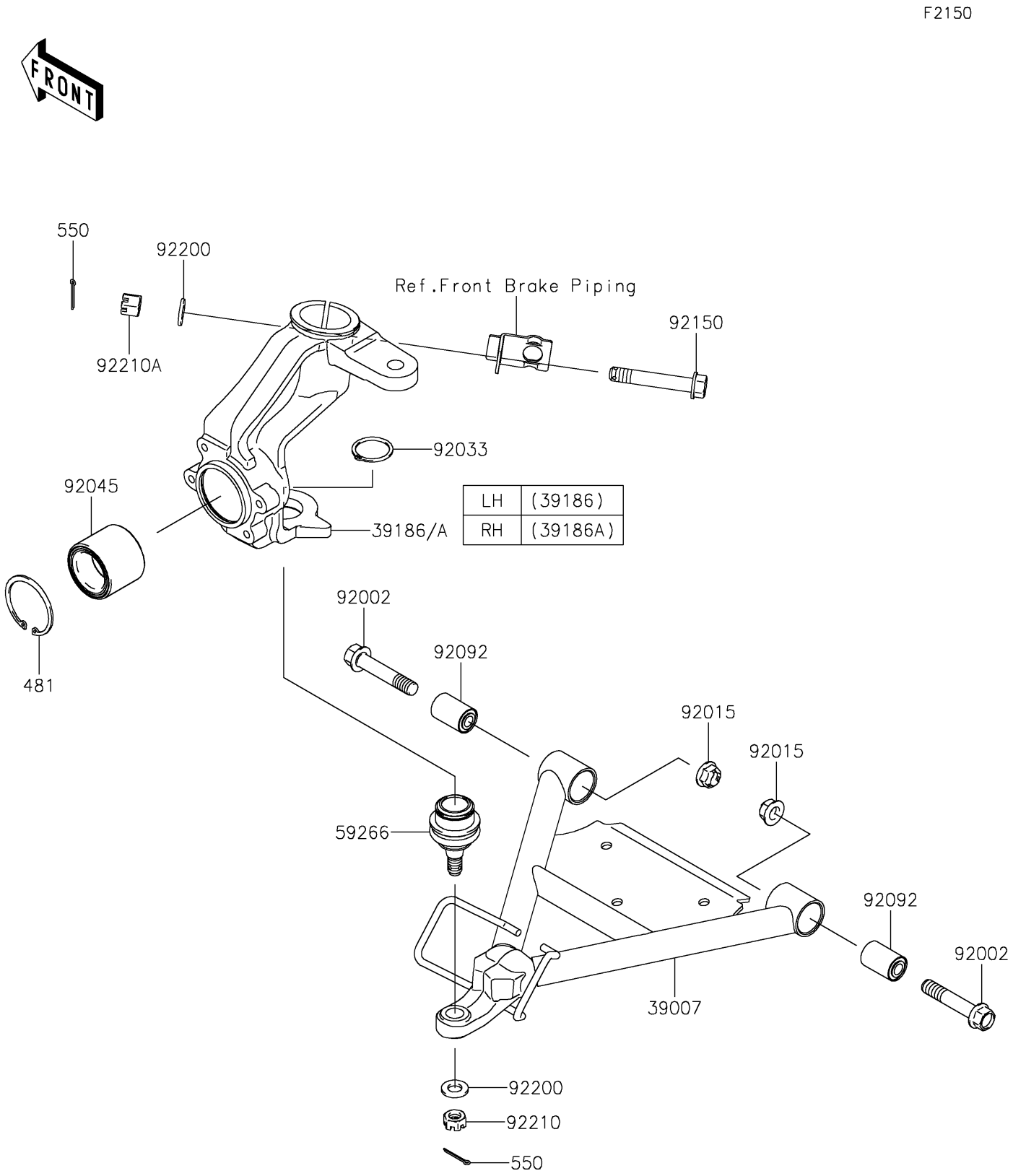

© 2026 Kawasaki Motors Corp., U.S.A.

2019 MULE SX™ 4x4 XC FI

PARTS LIST

Suspension

ITEM NAME	PART NUMBER	QUANTITY
ARM-SUSP (Ref # 39007)	39007-0397	2
KNUCKLE,LH (Ref # 39186)	39186-0314	1
KNUCKLE,RH (Ref # 39186A)	39186-0315	1
JOINT-BALL (Ref # 59266)	59266-1080	2
BOLT,ROD,12MM (Ref # 92002)	92002-1757	4
NUT,12MM (Ref # 92015)	92015-1706	4
RING-SNAP,C-TYPE,32MM (Ref # 92033)	92033-1262	2
BEARING-BALL,DAC2552W-7CS31 (Ref # 92045)	92045-0028	2
BUSHING-RUBBER (Ref # 92092)	92092-005	4
BOLT,FLANGED,12X72 (Ref # 92150)	92150-1356	2
WASHER,12.3X23X2.3 (Ref # 92200)	92200-1004	4
NUT,CASTLE,12MM (Ref # 92210)	92210-0395	2
NUT,12MM (Ref # 92210A)	92210-7501	2
CIRCLIP-TYPE-C,52MM (Ref # 481)	481J5200	2
PIN-COTTER,3.0X25 (Ref # 550)	550AA3025	4

© 2026 Kawasaki Motors Corp., U.S.A.