2019 MULE SX™ 4x4 XC FI

PARTS DIAGRAM

Air Cleaner

E1130

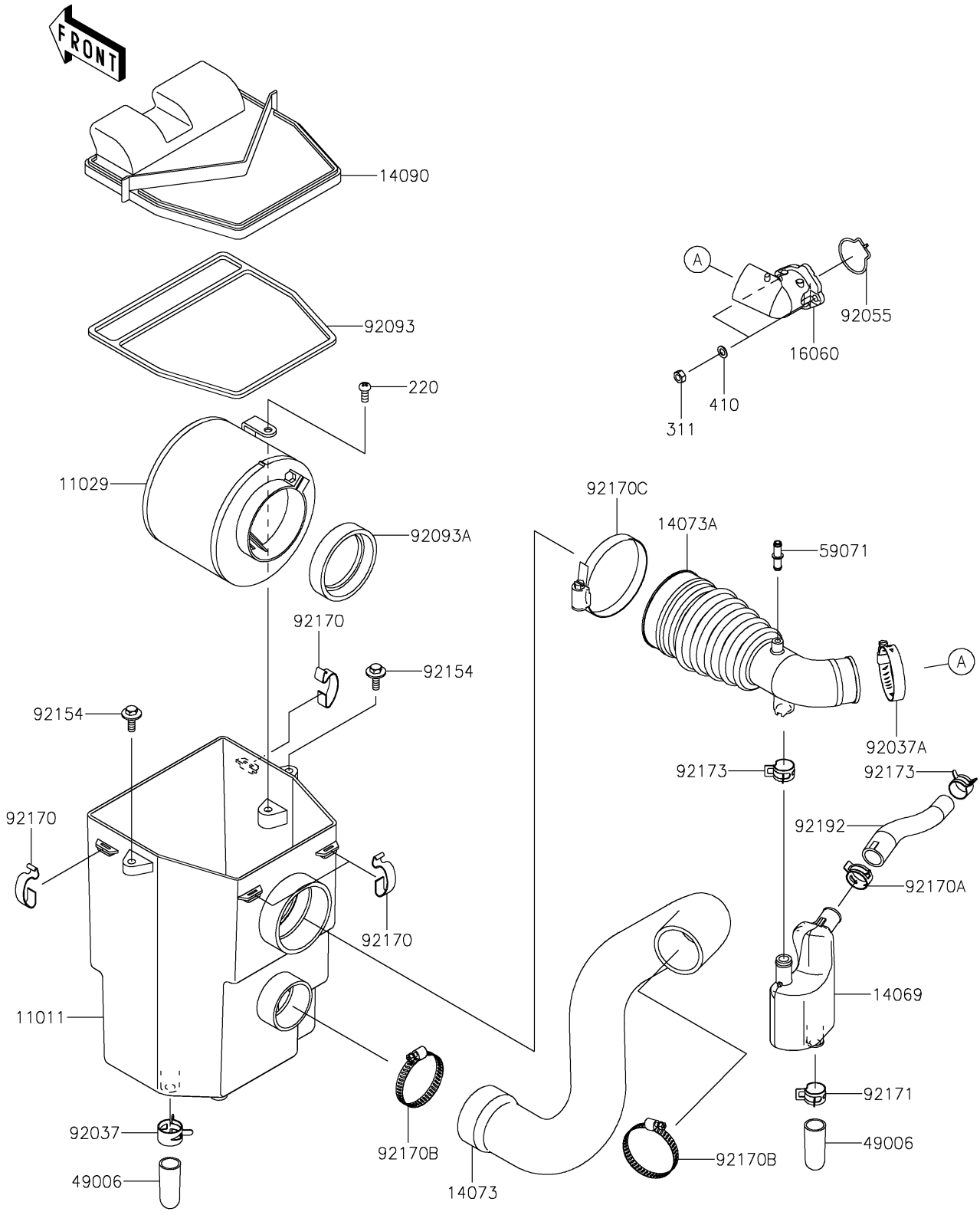

© 2026 Kawasaki Motors Corp., U.S.A.

2019 MULE SX™ 4x4 XC FI

PARTS LIST

Air Cleaner

ITEM NAME	PART NUMBER	QUANTITY
CASE-AIR FILTER (Ref # 11011)	11011-1367	1
ELEMENT-ASSY-AIR FILTER (Ref # 11029)	11029-1004	1
BREATHER (Ref # 14069)	14069-0030	1
DUCT,FRAME-AIR FILTER (Ref # 14073)	14073-0072	1
DUCT,AIR FILTER-IN.PIPE (Ref # 14073A)	14073-0893	1
COVER,AIR FILTER (Ref # 14090)	14090-1106	1
PIPE-INTAKE (Ref # 16060)	16060-0752	1
BOOT (Ref # 49006)	49006-1351	2
JOINT (Ref # 59071)	59071-3717	1
CLAMP,HOSE CLIP (Ref # 92037)	92037-1460	1
CLAMP (Ref # 92037A)	92037-506	1
RING-O,PIPE-TB (Ref # 92055)	92055-0901	1
SEAL,AIR FILTER (Ref # 92093)	92093-1241	1
SEAL,DUST (Ref # 92093A)	92093-1322	1
BOLT,WP,6X20 (Ref # 92154)	92154-1516	2
CLAMP,AIR FILTER (Ref # 92170)	92170-1211	4
CLAMP (Ref # 92170A)	92170-1640	1
CLAMP (Ref # 92170B)	92170-1674	2
CLAMP (Ref # 92170C)	92170-1679	1
CLAMP (Ref # 92171)	92171-1277	1
CLAMP (Ref # 92173)	92173-7003	2
TUBE,BREATHER (Ref # 92192)	92192-1935	1
SCREW-PAN-CROS,6X14 (Ref # 220)	220AA0614	1
NUT-HEX,6MM (Ref # 311)	311AA0600	2
WASHER-PLAIN-SMALL (Ref # 410)	410AA0600	2

© 2026 Kawasaki Motors Corp., U.S.A.