2020 MULE SX™ 4x4 FI

PARTS DIAGRAM

Frame

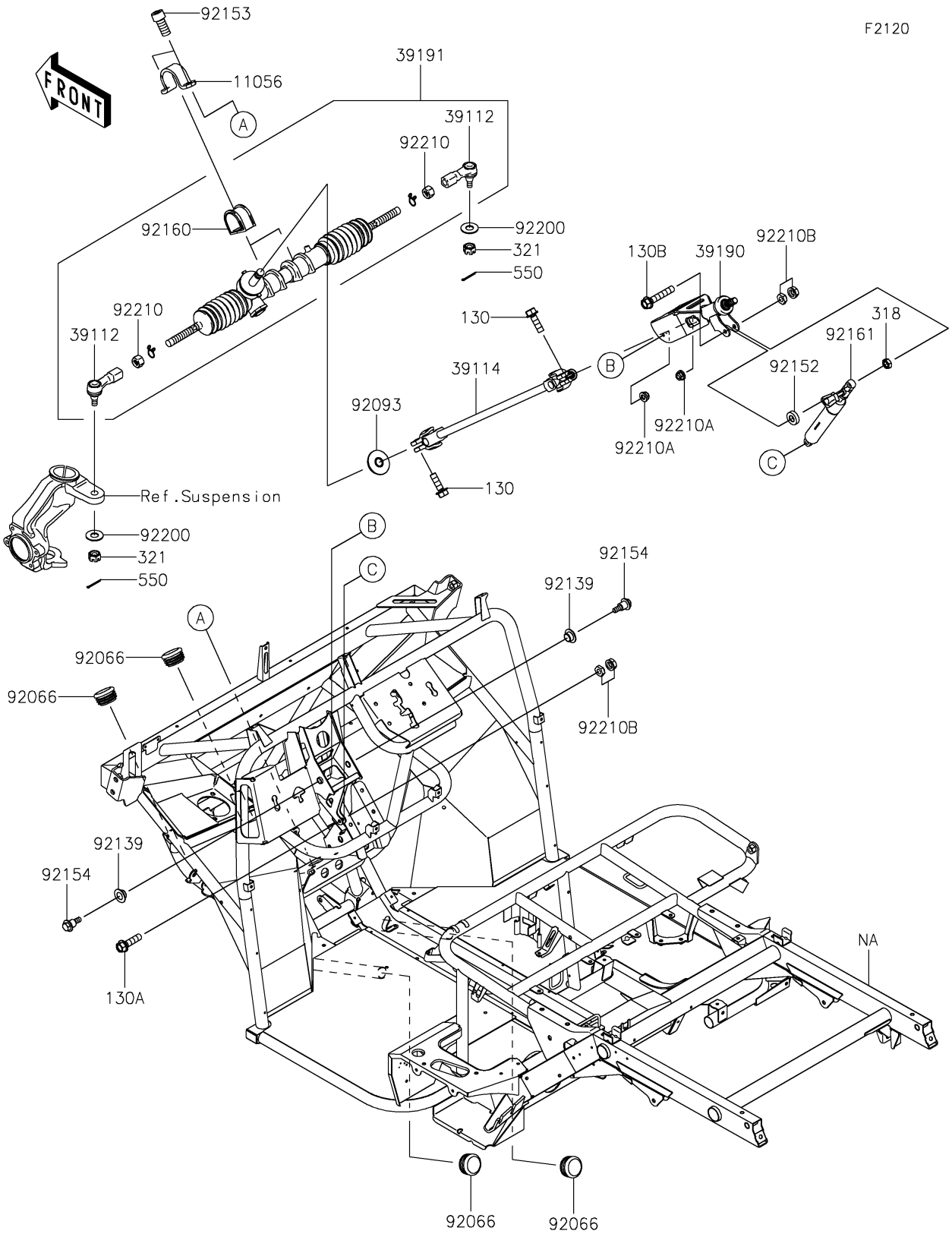

© 2026 Kawasaki Motors Corp., U.S.A.

2020 MULE SX™ 4x4 FI

PARTS LIST

Frame

ITEM NAME	PART NUMBER	QUANTITY

© 2026 Kawasaki Motors Corp., U.S.A.